OPERATION MANUAL

Mimaki

COLOR INKJET PRINTER

TS34-1800A

OPERATION MANUAL

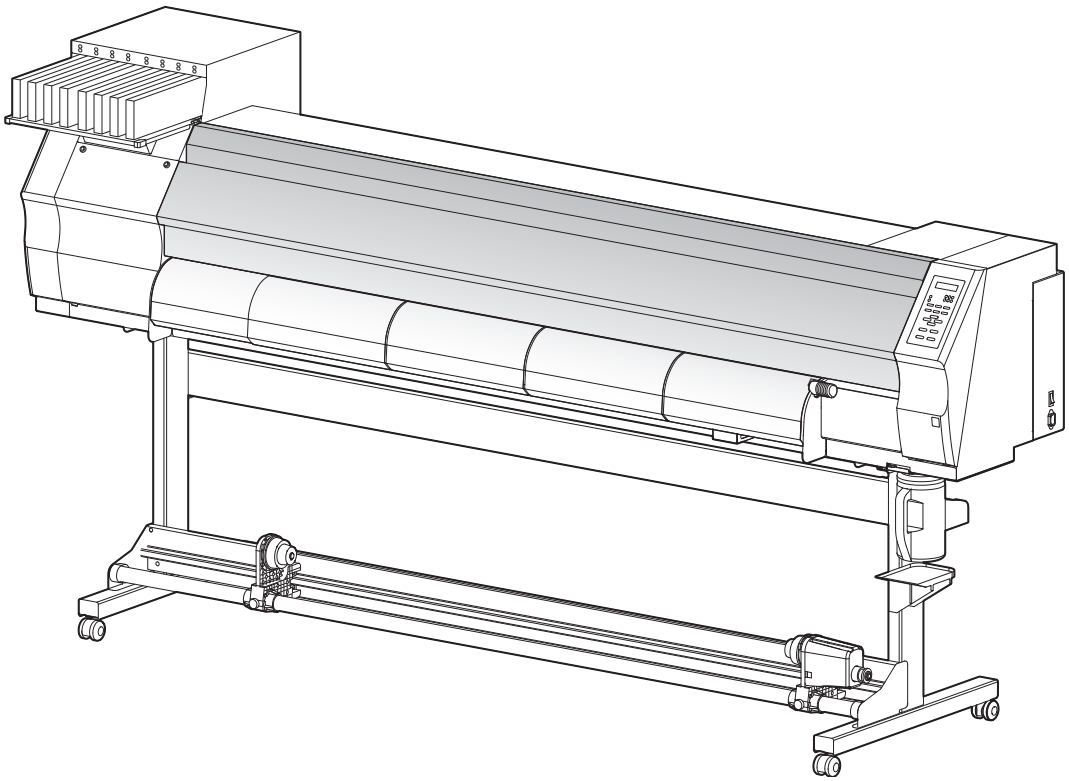

MIMAKI ENGINEERING CO., LTD.

URL: http://eng.mimaki.co.jp/

D202262-13

Original instructions

TABLE OF CONTENS

CAUTION v
DISCLAIMER OF WARRANTY v
Requests v
FCC Statement (USA) v
Interference to televisions and radios v
Foreword vi
About usable ink vi
On This Operation manual vi
Safety Precautions vii
Symbols vii
Safety interlock x

Chapter 1 Before Use

Moving This Machine 1-2
Where to Install This Machine 1-2
Working Environmental Temperature 1-2
Moving This Machine 1-3
Names of Parts and Functions 1-4
Front Side of the Machine 1-4
Rear Side and Right Side of the Machine 1-5
Operation Panel 1-6
Media sensor 1-7
Carriage 1-8
Cutter blade and slot for cutting 1-8
Capping station 1-9
Pinch rollers and Feed rollers 1-9
Connecting Cables 1-10
Connecting USB2.0 Interface Cable 1-10
Connecting the power cable 1-11
Inserting ink cartridges 1-12
Caution in handling of ink cartridges 1-13
Media 1-14
Usable sizes of media 1-14
Caution in handling of medias 1-14
Menu mode 1-15

Chapter 2 Basic Operations

About User Types 2-2
Settings That Can Be Registered in User Types 2-2
Using the Registered User Types 2-2
Workflow 2-3
Turning the Power ON/OFF 2-4
Turning the Power ON 2-4
Turning the Power OFF 2-5

Setting a Media 2-6
Adjusting the Head Height 2-6
Setting a roll media 2-8
Take-up device 2-13
Setting leaf media 2-14
Changing the printing origin 2-16
Test Printing 2-17
Test Printing 2-18
Head Cleaning 2-19
About head cleaning 2-19
Perform head cleaning depending on the test printing result 2-19
Printing Data 2-20
Starting a Printing Operation 2-20
Stopping a Printing Operation 2-21
Deleting Received Data (Data Clear) 2-21
Cutting a media 2-22

Chapter 3 Extended Functions

About User Types 3-2
Registering All Printing Conditions Together (Type Registration) 3-2
How to Register User Types 3-2
Setting Media Correction 3-4
Setting Media Correction 3-4
If the Positions of Dots Shift... 3-6
Setting the Printing Method 3-8
Setting of the PASS (print quality) 3-8
Setting a Scanning Speed 3-9
Setting a Scanning Direction 3-10
Setting Logical Seek 3-11
Setting Drying Time 3-12
Setting Margins 3-13
Setting Color Pattern 3-14
Setting Automatic Cleaning 3-15
Setting Cleaning during Printing 3-17
Setting the CLEANING 3-17
Setting the WIPING 3-18
Setting Media Detection 3-20
Perform setting to reduce stripes between passes 3-21
Other Settings 3-23
Initializing the Settings 3-24
Machine Settings 3-25
Setting the DRYNESS FEED 3-26
Setting the CONFIRM. FEED 3-27
Setting the Time 3-28
Setting the Units 3-29
Stamp Setting 3-30
Setting the MACHINE NAME 3-31
Setting a KEY BUZZER 3-32
Change the operation condition of the ambient temperature 3-33

Extension of Ink Expiry Month 3-34
Extension of Ink Expiry Month 3-34
Switch Setting of Ink Supply Path 3-36
Confirming Machine Information 3-38
Displaying the Information 3-38

Chapter 4 Maintenance

Maintenance 4-2
Precautions for Maintenance 4-2
About Cleaning Solution 4-2
Cleaning the Exterior Surfaces 4-3
Cleaning the Platen 4-3
Cleaning the Media Sensor 4-4
Cleaning the Media Holder 4-4
Maintaining the Capping Station 4-5
Cleaning the Wiper and Cap 4-5
Replacing the wiper 4-7
Washing of Head nozzle 4-8
Washing the Ink Discharge Passage (PUMP Tube Washing) 4-10
When the Machine Is Not Used for a Long Time (CUSTODY WASH) 4-12
Cleaning the Ink Head and the Area around It 4-14
When Nozzle Clogging Cannot Be Solved 4-16
FILL UP INK 4-16
DISCHARGE & WASH 4-17
Supplying the Machine with Ink Anew 4-19
Automatic Maintenance Function 4-20
Setting the Refreshing Intervals 4-20
Setting the Cleaning Intervals 4-21
Other Maintenance Functions 4-22
Changing the Time When a Warning about Wiper Replacement Is Issued 4-22
Setting the Head Selection 4-23
Setting the Display of Media Residual 4-24
If a Waste Ink Tank Confirmation Message Appears 4-26
To change the ink color 4-30
To use sublimation transfer ink with more stable quality 4-31
Set the interval to display the warning message (only when using sublimation dye ink) 4-32
Replacing the Cutter Blade 4-33

Chapter 5 Troubleshooting

Troubleshooting 5-2
Power does not turn on 5-2
The machine does not start printing 5-2
Media get jammed / media is soiled 5-3
Image quality is poor 5-4
Nozzle is clogged 5-4
Ink cartridge warning appears 5-5
Warning / Error Messages 5-6
Warning messages 5-6
Error messages 5-9

Chapter 6 Appendix

Specifications 6-2
Machine specifications 6-2
Ink specifications 6-3
Setting orders depending on ink type 6-4
Setting orders of ink cartridges 6-4
Maintenance intervals of automatic maintenance function 6-4
Sheet for inquiry 6-5
Warning labels 6-6
Function Flowchart 6-8

CAUTION

DISCLAIMER OF WARRANTY

THIS LIMITED WARRANTY OF MIMAKI SHALL BE THE SOLE AND EXCLUSIVE WARRANTY AND IS IN LIEU OF ALL OTHER WARRANTIES, EXPRESS OR IMPLIED, INCLUDING, BUT NOT LIMITED TO, ANY IMPLIED WARRANTY OF MERCHANTABILITY OR FITNESS, AND MIMAKI NEITHER ASSUMES NOR AUTHORIZES DEALER TO ASSUME FOR IT ANY OTHER OBLIGATION OR LIABILITY OR MAKE ANY OTHER WARRANTY OR MAKE ANY OTHER WARRANTY IN CONNECTION WITH ANY PRODUCT WITHOUT MIMAKI'S PRIOR WRITTEN CONSENT.
IN NO EVENT SHALL MIMAKI BE LIABLE FOR SPECIAL, INCIDENTAL OR CONSEQUENTIAL DAMAGES OR FOR LOSS OF PROFITS OF DEALER OR CUSTOMERS OF ANY PRODUCT.

Requests

- This Operation manual has been carefully prepared for your easy understanding.
  However, please do not hesitate to contact a distributor in your district or our office if you have any inquiry.
- Description contained in this Operation manual are subject to change without notice for improvement.

FCC Statement (USA)

This equipment has been tested and found to comply with the limits for a Class A digital device, pursuant to Part 15 of the FCC Rules. These limits are designed to provide reasonable protection against harmful interference when the equipment is operated in a commercial environment. This equipment generates, uses and can radiate radio frequency energy and, if not installed and used in accordance with the Operation manual, may cause harmful interference to radio communications.
Operation of this equipment in a residential area is likely to cause harmful interference in which case the user will be required to correct the interference at his own expense.
In the case where MIMAKI-recommended cable is not used for connection of this device, limits provided by FCC rules can be exceeded.
To prevent this, use of MIMAKI-recommended cable is essential for the connection of this printer.

Interference to televisions and radios

The product described in this manual generates high frequency when operating.
The product can interfere with radios and televisions if set up or commissioned under improper conditions.
The product is not guaranteed against any damage to specific-purpose radio and televisions.
The product's interference with your radio or television will be checked by turning on/off the power switch of the product.
In the event that the product is the cause of interference, try to eliminate it by taking one of the following corrective measures or taking some of them in combination.

- Change the orientation of the antenna of the television set or radio to find a position without reception difficulty.
- Separate the television set or radio from this product.
- Plug the power cord of this product into an outlet which is isolated from power circuits connected to the television set or radio.

Foreword

Congratulations on your purchase of MIMAKI color ink jet printer "TS34-1800A" .
“TS34-1800A” is a color inkjet printer that can print on 1.9m-width media with aqueous ink (4-color and 6-color) realizing high image quality.

About usable ink

You can use aqueous pigment ink (Pig) and sublimation dye ink (Sb52) for this machine.

Important!

- For usable ink, refer to p.6-3 “Ink specifications” and P.6-4 “Setting orders of ink cartridges”.

On This Operation manual

- This Operation manual is describing the operations and maintenance of "Color inkjet printer TS34-1800A" (called as this machine hereafter)
- Read this Operation manual carefully and understand them thoroughly to use.
- It is also necessary to keep this Operation manual on hand.
- This Operation manual has been carefully prepared for your easy understanding, however, please do not hesitate to contact a distributor in your district or our office if you have any inquiry.
- Descriptions contained in this Operation manual are subject to change without any notice for improvement.
- In the case when this Operation manual should be illegible due to destruction or lost by fire or breakage, purchase another copy of the Operation manual from our office.
- You can also download the latest manual from our website.

Reproduction of this manual is strictly prohibited.
All Rights Reserved.Copyright
© 2013 MIMAKI ENGINEERING Co., Ltd.

Symbols

Symbols are used in this Operation Manual for safe operation and for prevention of damage to the machine.
The indicated sign is different depending on the content of caution.
Symbols and their meanings are given below. Please follow these instructions as you read this manual.

Examples of symbols

Meaning	
	Failure to observe the instructions given with this symbol can result in death or serious injuries to personnel. Be sure to read it carefully and use it properly.
	Failure to observe the instructions given with this symbol can result in injuries to personnel or damage to property.
	Important notes in use of this machine are given with this symbol. Understand the notes thoroughly to operate the machine properly.
	Useful information is given with this symbol. Refer to the information to operate the machine properly.
	Indicates the reference page for related contents.
	The symbol " △ " indicates that the instructions must be observed as strictly as the CAUTION instructions (including DANGER and WARNING instructions). A sign representing a precaution (the sign shown at left warns of hazardous voltage) is shown in the triangle.
	The symbol " ⃠ " indicates that the action shown is prohibited. A sign representing a prohibited action (the sign shown at left prohibits disassembly) is shown in or around the circle.
	The symbol " ● " indicates that the action shown must be taken without fail or the instructions must be observed without fail. A sign representing a particular instruction (the sign shown at left instructs to unplug the cable from the wall outlet) is shown in the circle.

Warning for Use

⚠ WARNING

- Do not use the machine in a poorly ventilated room or a closed room.
- Use the attached power cable.
- Take care not to damage, break or work upon the power cable. If a heavy material is placed on the power cable, or if it is heated or pulled, the power cable can break, thus resulting in fire or electric shocks.
- Avoid locating the machine in a damp environment. Do not splash water onto the machine. Use in such an environment can give rise to fire, electric shocks or breakdown of the machine.
- Use of the machine under an abnormal condition where it produces smoke or strange smell can result in fire or electric shocks. If such an abnormality is found, be sure to turn off the power switch immediately and unplug the cable from the wall outlet. Check first that the machine no longer produces smoke, and then contact your distributor or a sales office of MIMAKI for repair.
- Never repair your machine by yourself since it is very dangerous for you to do so.
- Never disassemble or remodel the main unit of the machine or the ink cartridge. Disassembly or remodeling can result in an electric shock or breakdown of the machine.

Hazardous Moving Parts
Keep Fingers and Other Body Parts Away

Precautions in Use

⚠ CAUTION

Power supply

- Leave the breaker turned ON.
- Do not turn off the main power switch on the right side of this machine.

Note on maintenance

- When cleaning the ink-station or the heads, make sure to wear the attached gloves.

Handling of ink

- If you get ink in your eyes, immediately wash your eyes with a lot of clean water for at least 15 minutes. In doing so, also wash eyes to rinse ink away completely. Then, consult a doctor as soon as possible.
- If anyone drinks ink by mistake, keep him or her quiet and see a doctor immediately. Do not allow him or her to swallow the vomit. After that, contact the Poison Control Center.

CAUTIONS and NOTES

⚠ Warning

Handling of ink cartridges

- Use the TS34 genuine ink. Remember that the user shall be filled for a repair to correct any damage resulting from the use of ink other than the exclusive type.
- The machine does not operate with any ink other than the TS34 genuine ink.
- Do not use the TS34 genuine ink with other printers, as doing so may cause damage to such machines.
- Never refill the ink cartridge with ink. Refilled ink cartridge can cause a trouble. Remember that MIMAKI assumes no responsibility for any damage caused by the use of the ink cartridge replenished with ink.
- If the ink cartridge is moved from a cold place to a warm place, leave it in the room temperature for three hours or more before using it.
- Open the ink cartridge just before installing it in the machine. If it is opened and left for an extended period of time, normal printing performance of the machine may not be ensured.
- Make sure to store ink cartridges in a cool and dark place.
- Store ink cartridges and waste ink tank in a place that is out of the reach of children.
- Be sure to thoroughly consume the ink in the ink cartridge, once it is opened, within three months. If an extended period of time has passed away after opening the cartridge tank, printing quality would be poor.
- Neither pound the ink cartridge nor shake it violently, as doing so can cause leakage of ink.
- Do not touch or stain the contacts of the ink cartridge, as doing so may cause damage to the print circuit board.
- Waste ink is equivalent to waste oil of industrial waste. Request an industrial waste disposal company for disposal of waste ink.

Front cover and lever

- Never open the front cover or raise the lever during printing. Opening the cover or raising the lever will abort printing.

Handling of media

- Use media recommended by MIMAKI to ensure reliable, high-quality printing.
- Pay attention to the expansion and contraction of the media.
  Do not use media immediately after unpacking. The media can be affected by the room temperature and humidity, and thus it may expand and contract.The media have to be left in the atmosphere in which they are to be used for 30 minutes or more after unpacked.
- Do not use curled media.
  The use of curled media can not only cause a media jam but also affect print quality.
  Straighten the sheet of media, if significantly curled, before using it for printing. If a regular-sized coated sheet of media is rolled and stored, the coated side has to face outside.

Protection of media from dust

- Store media in a bag. Wiping off dust accumulated on media will adversely affect the media due to static electricity.
- When leaving the workshop after the working hours, do not leave any media on the roll hanger. If any media is left on the roll hanger, it can get dusty.

⚠ Warning

Notes on maintenance

- It is strongly recommended to use the machine in a room that is not dusty. Set the Refresh level 2 or 3 when the machine is to be used in an unfavorable environment. (P.3-23 “Other Settings”)
- Keep the front cover closed even when the machine is not printing. If not, dust can accumulate on the nozzles in the heads.
- Dust in the heads can also cause drops of ink to fall suddenly down on the media during printing. In such a case, be sure to clean up the heads. (P.3-15 “Setting Automatic Cleaning”)
- When cleaning the ink-station or the heads, make sure to wear the attached gloves.
- Perform wiping (removal of dust and paper powder) of the capping station and wiper frequently.

Periodic replacement parts

- Some parts of this machine must be replaced with a new one periodically by service personnel. Be sure to make a contract with your distributor or dealer for After sale service to ensure a long life of your machine.

Disposition of this machine

- When discarding this machine, request the treatment of it for an industrial waste disposal contractor.
- Treat it properly in compliance with regulation in the local area.

Cautions on Installation

CAUTION		
A place exposed to direct sunlight	**On an inclined surface**	**A place where temperature or humidity varies significantly**
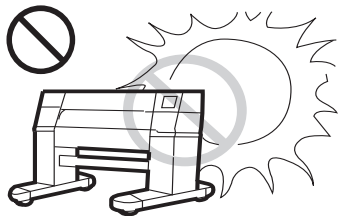	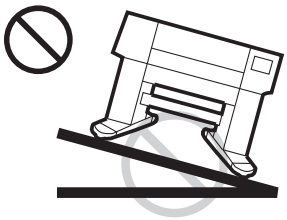	• Use the machine under the following environmental conditions: • Operating environment: 20 to 35 °C (68 to 95 °F) 35 to 65 % (Rh)
A place that vibrates	**A place exposed to direct air flow from an air conditioner or the like.**	**Around a place where fire is used**
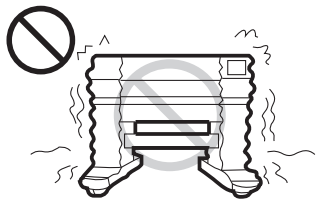	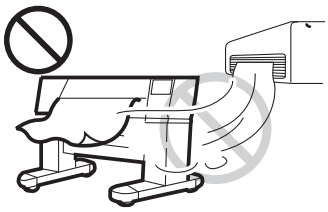	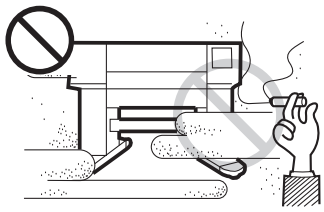

Safety interlock

This machine is equipped with interlocks to terminate the operation for your safety when the cover opens during printing etc. (red circle parts in the figure below).

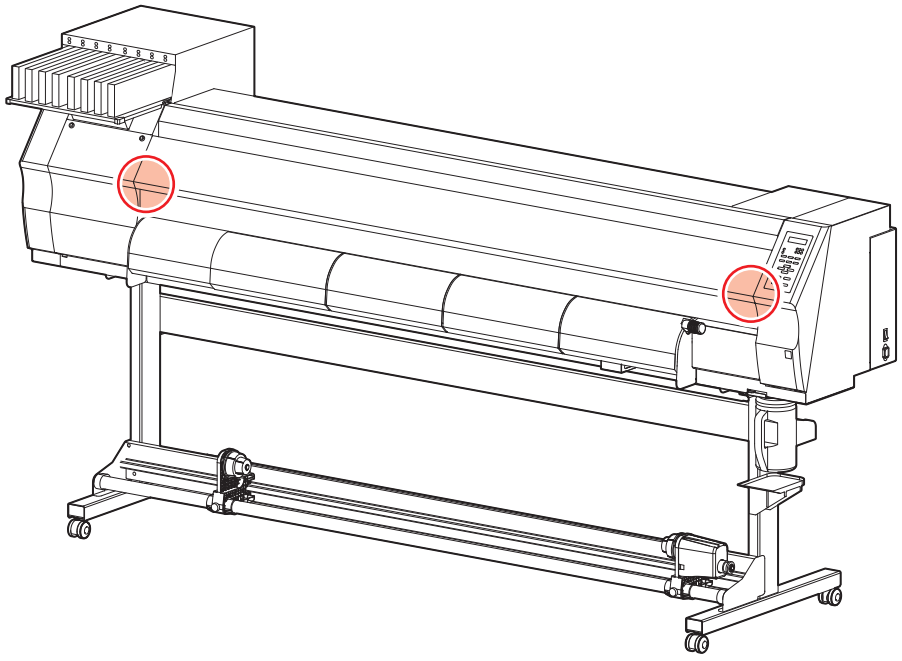

Chapter 1
Before Use

This chapter

describes the items required to understand before use, such as the name of each part of the machine or the installation procedures.

Moving This Machine 1-2
- Where to Install This Machine 1-2
- Working Environmental Temperature 1-2
- Moving This Machine 1-3

Names of Parts and Functions 1-4
- Front Side of the Machine 1-4
- Rear Side and Right Side of the Machine ... 1-5
- Operation Panel 1-6
- Media sensor 1-7
- Carriage 1-8
- Cutter blade and slot for cutting 1-8
- Capping station 1-9
- Pinch rollers and Feed rollers 1-9

Connecting Cables 1-10
- Connecting USB2.0 Interface Cable 1-10
- Connecting the power cable 1-11

Inserting ink cartridges 1-12
- Caution in handling of ink cartridges 1-13

Media 1-14
- Usable sizes of media 1-14
- Caution in handling of medias 1-14

Menu mode 1-15

Moving This Machine

Where to Install This Machine

Secure a suitable installation space before assembling this machine.
The place of installation must have enough space for not only this machine itself, but also for the printing operation.

Model	Width	Depth	Height	Gross weight
TS34-1800A	2840mm	739mm	1424mm	210kg

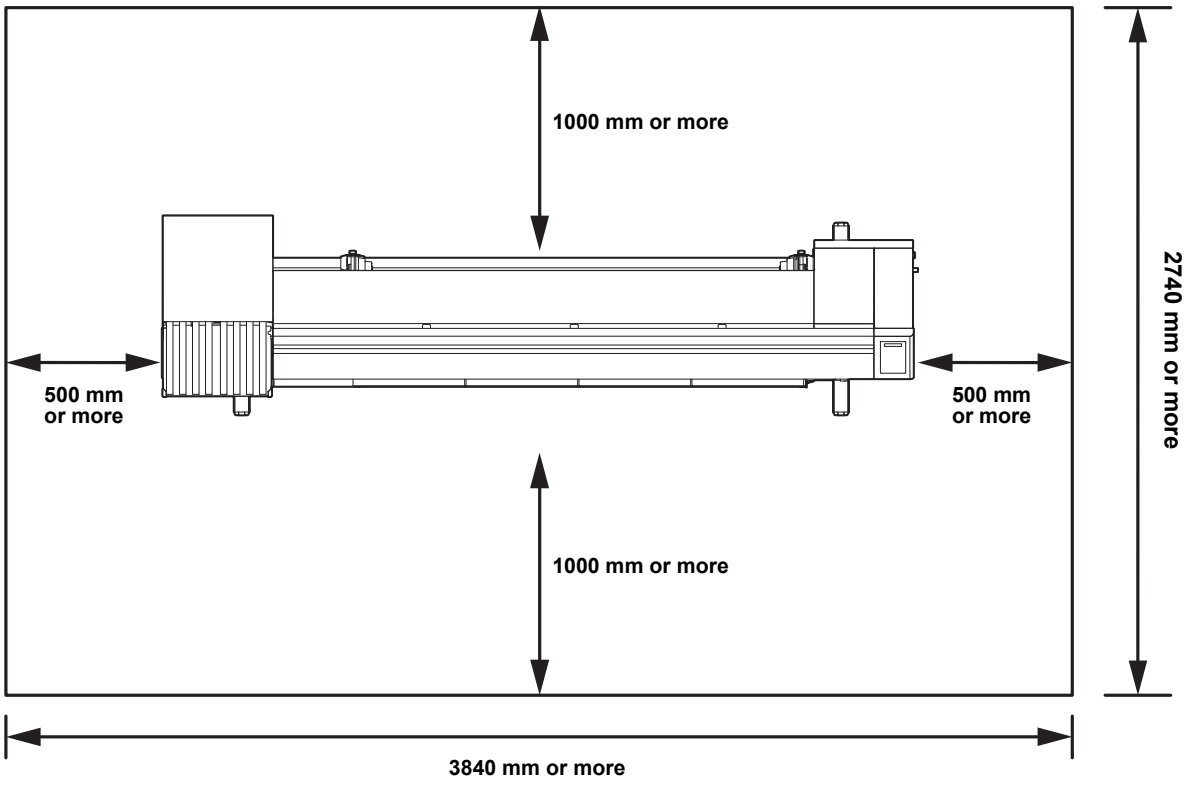

Working Environmental Temperature

Use this machine in an environment of 20 to 35°C to ensure reliable printing.

Moving This Machine

Move this machine according to the following steps when this machine needs to be moved on the same step-free floor.

Important!

- When the machine is moved to any place other than on the same step-free floor, contact your distributor or our service office.
  If you move it by yourself, failure or damage may occur.
  Be sure to request your distributor or our service office to move this machine.

Caution

- When moving this machine, take care that it does not receive a significant impact.
- Be sure to lock the casters after moving of this machine.

1 Unlock the casters.

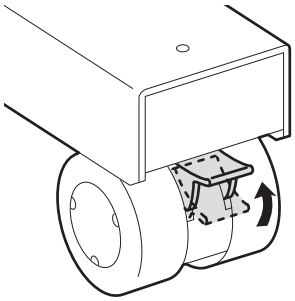

2 Move this machine as shown in the figure.

- For safety, be sure to operate it with 4 people or more.
- Do not push the cover to move this machine since the cover may be broken.

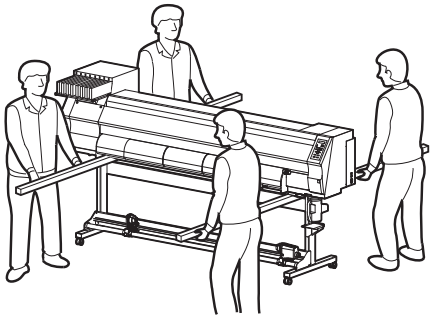

3 Lock the casters.

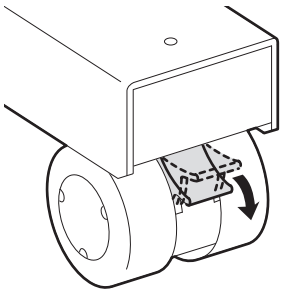

Names of Parts and Functions

Front Side of the Machine

Maintenance cover

Open the cover in maintenance.
Even when the power switch is off, keep all covers closed.

Front cover

Open the cover in setting of medias, taking of measures against jamming of medias or in maintenance inside the station.
Even when the power switch is off, keep this cover and the other covers closed.

Ink cartridges
Each cartridge contains an ink of a particular color.

Cartridge protection cover
This prevents an injury or breakage of the machine due to a protrusion of the 440 cc cartridge.
(It is located under the ink cartridge.)

Clamp lever (front)

Moves the pinch rollers up and down to hold or release the media.

Carriage

Move the print head unit from side to side.

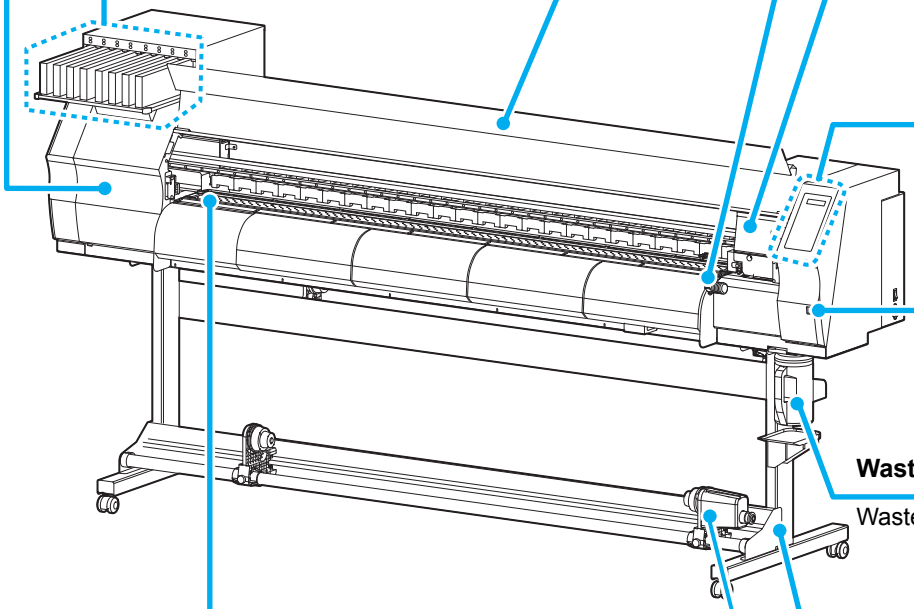

Operation panel

This panel has the operation keys required for operating the machine and the LCDs for displaying setting items, etc.

Power switch*1

Turns on/off the power to the machine.

Waste ink tank

Waste ink gathers in this tank.

Platen
The printed media is sent out, sliding on the platen.

Stand

Supports the main body of the machine. It is provided with casters that are used to move this machine.

Take-up device

Automatically winds up the roll media printed.

*1 : The power switch under the operation panel lights in green when the power is turned on, and blinks when the power switch is turned off. The ink clogging prevention function is periodically operated even when the power switch is OFF if the main power switch keeps being ON. (Auto maintenance function) ☞ P.1-5

Rear Side and Right Side of the Machine

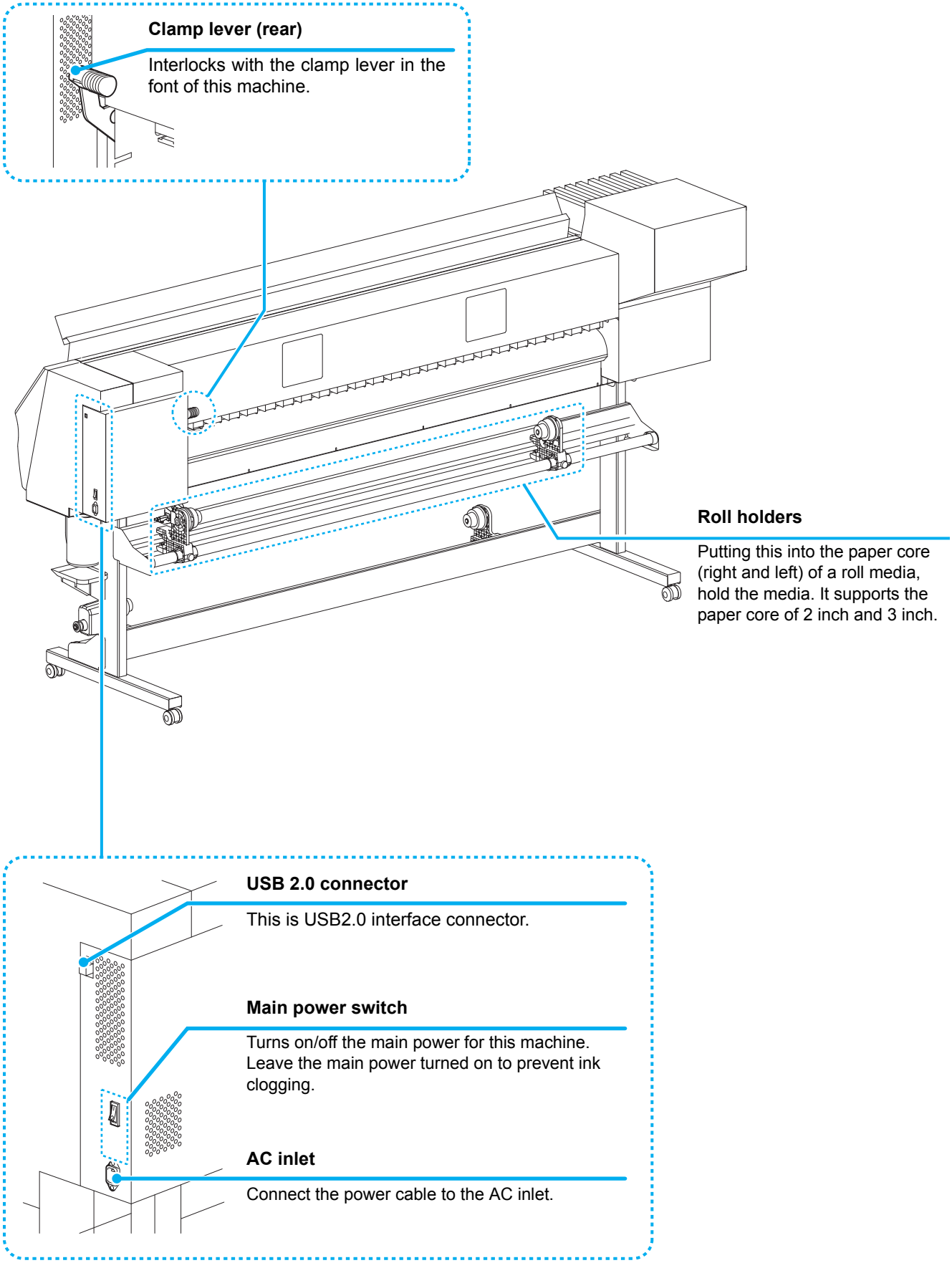

Operation Panel

Use the operation panel to make settings for printing or operate this machine.

Display

Displays the status of the machine, set items and errors.

ACTIVE lamp

Blinks in receiving or drawing data.

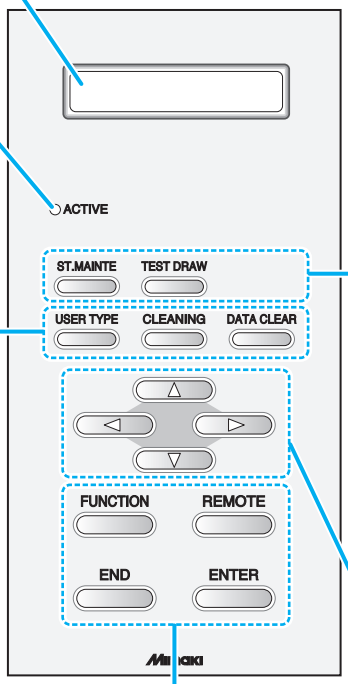

ST.MAINTE key
Use this key on Station maintenance.

TEST PRINT key
Draws test patterns to check if there are any drawing failures such as ink clogging.

USER TYPE key
Selects User type.

CLEANING key
Executes Head cleaning at ink clogging.

DATA CLEAR key
Deletes the data that have been received.

JOG key

Use these keys to shift the carriage or the media in [LOCAL]. Also use them to select an item of printing conditions.

FUNCTION key
Use this key to display function setting menu.

END key
Cancels the last input value or returns the setting menu to the immediate higher level of the hierarchy.

REMOTE key
Use this key to switch between [REMOTE] and [LOCAL].

ENTER key
Registers the last input value as the setting value or goes to the immediate lower level of the hierarchy.

Media sensor

The media sensor detects the presence of the media and the media length.
This machine has one media sensor on the platen (in the rear).

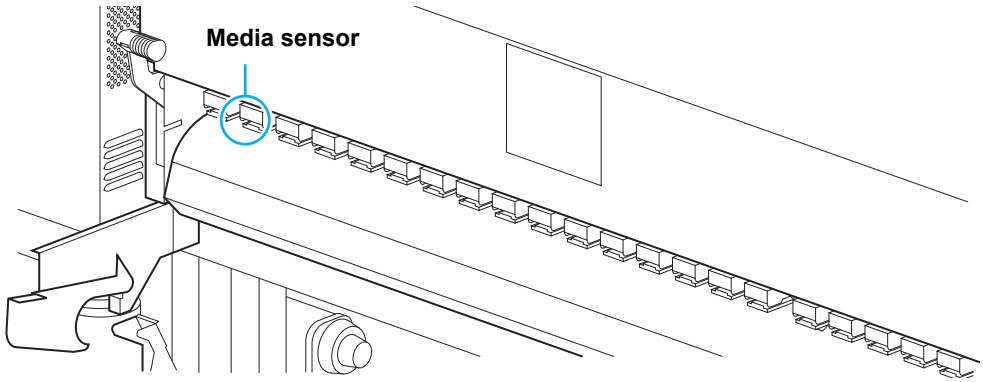

Important!

- When setting a media, be sure to cover the media sensors located on the rear of the platen. The media cannot be detected unless it is placed over the sensor.

Carriage

The carriage is provided with the ink heads for printing, the cutter unit for cutting off the sheet of media, etc.
A lever is also provided to adjust the height of Head in 2 stages according to the thickness of media. (☞ P.2-6)

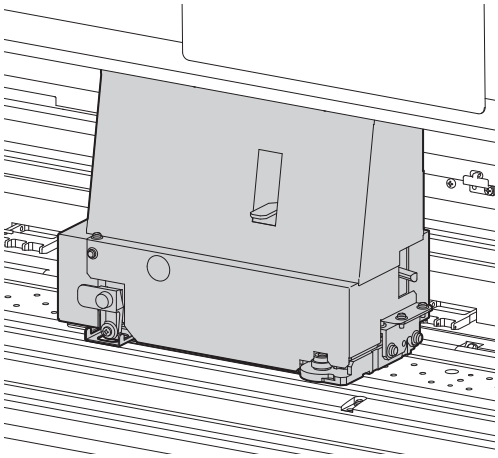

Cutter blade and slot for cutting

The carriage is provided with a cutter unit for cutting off the media that has been printed on.
The cutter cuts off the sheet of media along the slot for cutting on the platen.

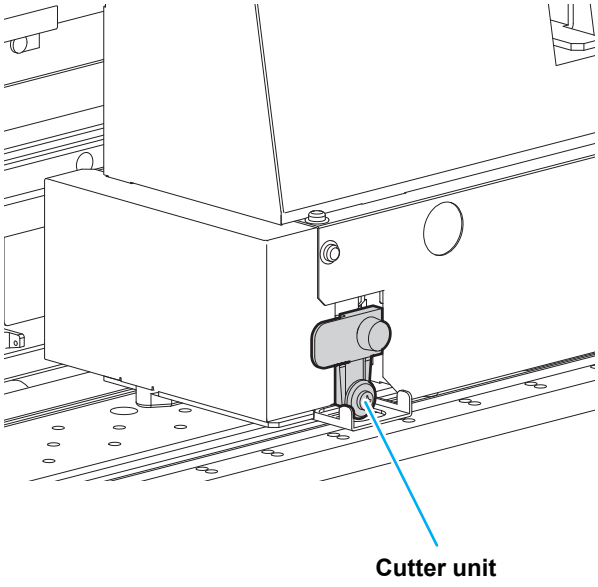

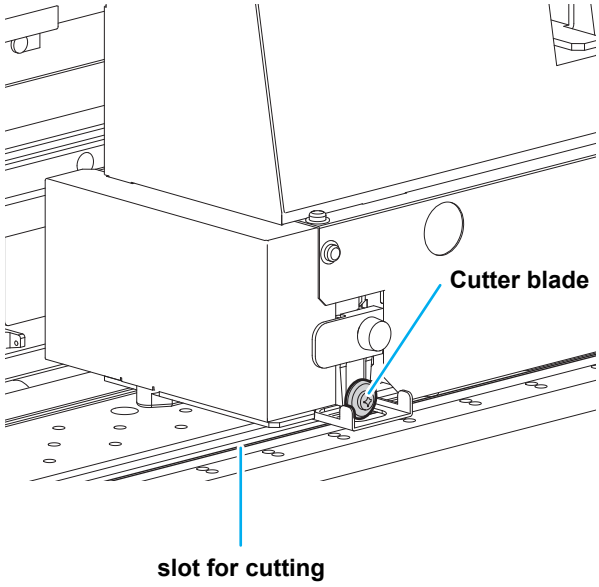

Capping station

- Be sure to wear the attached goggles in cleaning within the capping station to protect your eyes against ink. Otherwise, you may get ink in your eyes.

The capping station consists of the ink caps, the wiper for cleaning the heads, etc.
The ink caps prevent the nozzles in the ink heads from drying up.
The wiper cleans the nozzles in the heads.
The wiper is consumable.If the wiper is deformed or the media is stained, replace the wiper with a new one.

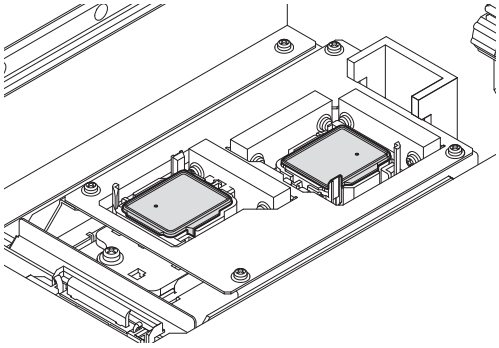

Pinch rollers and Feed rollers

Important!

- Keep the pinch rollers lifted up when this machine is not in use. If the pinch rollers are left lowered for an extended period of time, they can be deformed and fail to securely retain the media.

This machine retains the media with the pinch rollers and feed rollers. During printing operation, the feed rollers feed the media forward.

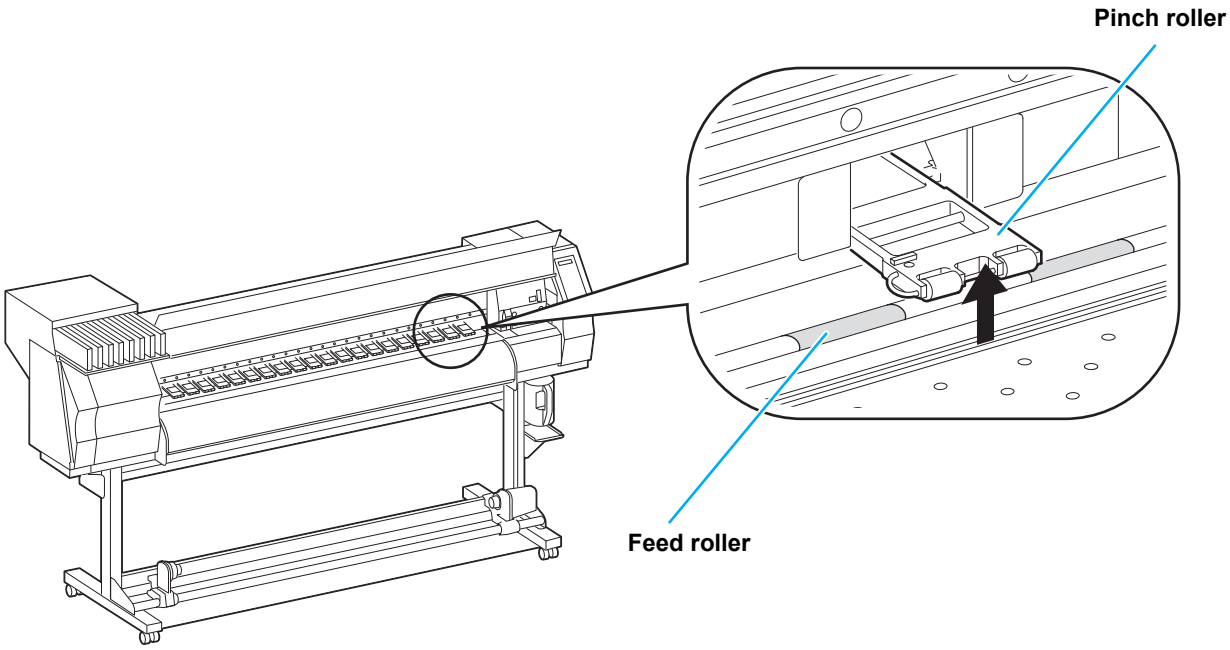

Connecting USB2.0 Interface Cable

Connect the PC and this machine with the USB2.0 interface cable.

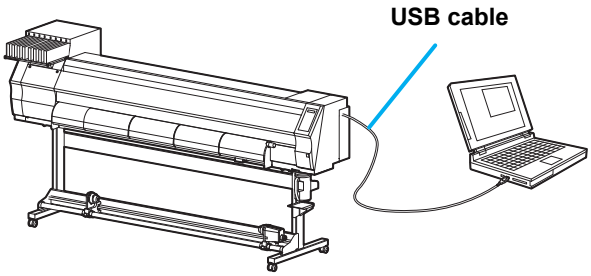

Caution

- Your RIP must be compatible with USB 2.0.
- Contact a RIP maker near your location or our office when the USB2.0 interface is not attached to the PC.

Notes on USB 2.0 Interface

Important!

- Your RIP must be compatible with USB 2.0.

● When two or more TS34 machines are connected to one personal computer

When two or more TS34 machines are connected to one personal computer, the personal computer may not recognize all the TS34 machines normally.
Reconnect the unrecognized TS34 machine to another USB port, if available, and check to see if it is recognized.If the TS34 machine is not recognized by the newly connected USB port, use USB 2.0 repeater cables available on the market.

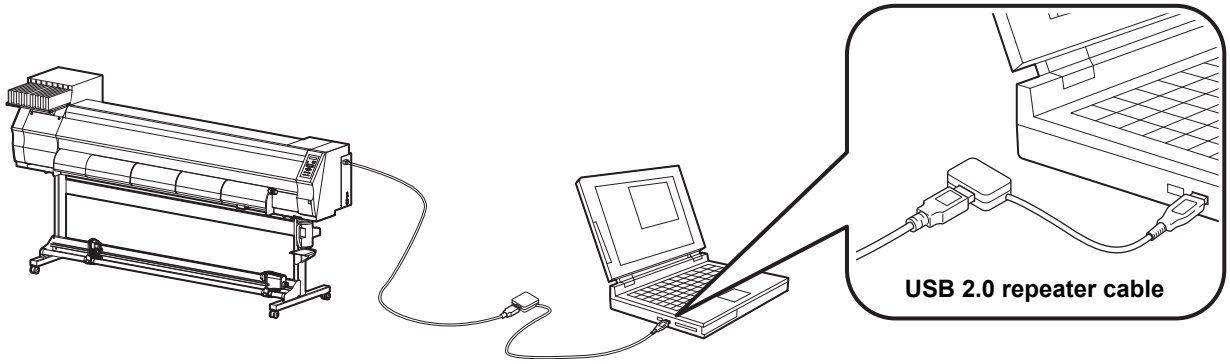

● Notes on peripheral devices in USB high speed mode

When a peripheral device (USB memory or USB HDD) to be operated in USB high speed mode is connected to the same personal computer that a TS34 machine is connected to, the USB device may not be recognized.
When TS34 is connected to the personal computer to which an external HDD is connected via USB, the speed of data output to TS34 may drop.That can cause the head unit to stop temporarily at the right or left end during printing.

● Removing USB memory

If a USB memory module is inserted in the personal computer to which a TS34 machine is connected, click "Stop" in the "Safely Remove Hardware" window by following the instructions given there first and then remove the module.
Leaving a USB memory module inserted can cause [ERROR 10 COMMAND ERROR].
Copy the data onto the hard disk before outputting it for printing.

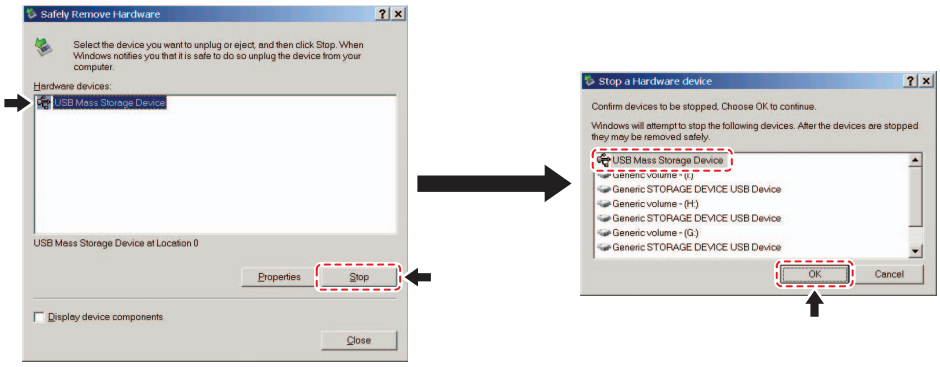

Connecting the power cable

1 **Insert the power cable into an inlet of the machine.**

2 **Secure a cable band.**

- Secure the cable with the cable band attached to this machine.

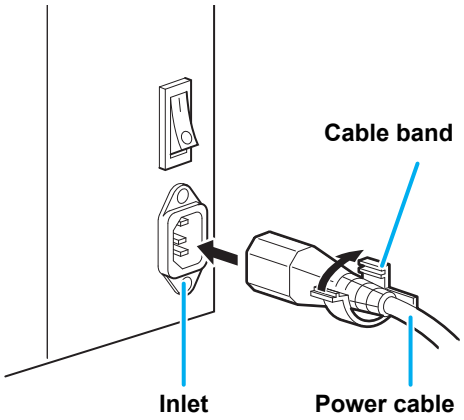

3 **Insert the power plug into a plug socket.**

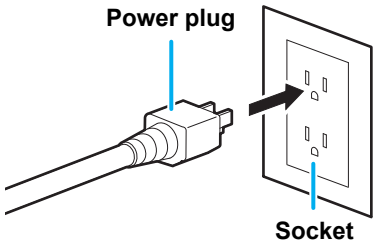

Warning

- Do not use any power cables other than the attached power cable.

Important!

- Be sure to connect the power cable to the outlet near this machine, and make sure that the power cable can be easily removed.
- Connect the power cable to the grounded outlet.Otherwise, it may result in fire or an electric shock.

Inserting ink cartridges

Insert an ink cartridges.

1 **Shake the ink cartridge as shown on the right.**

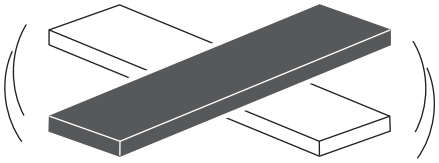

2 **Insert the ink cartridge.**

- Insert the ink cartridge lengthwise with the surface having IC chips pointing to the left side.
- Colors are displayed on the display as follows.
  Black: K, Cyan: C, Magenta: M, Yellow: Y,
  Blue: B, Light cyan: c, Light magenta: m, Light blue: b

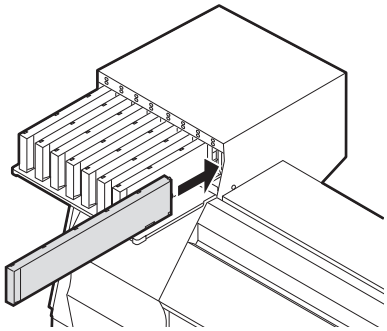

Changing an ink cartridge

Perform as follows when [INK END] or [INK NEAR END] is displayed on the display.

- **When [INK END] is displayed**

  (1) Pull out an ink cartridge to be replaced.
  (2) Insert a new ink cartridge, paying attention to the direction of IC chip.

- **When [INK NEAR END] is displayed**

There is a little of ink left. It is recommended to replace the ink cartridge soon since ink may become empty in printing while printing is continuously enabled.

Important!

- During [INK NEAR END] is displayed, the setting of In-printing cleaning is disabled. (☞ P.3-15)

For Ink cartridge lamps

The condition of the ink cartridges set in the machine is confirmable with lamps located over the ink cartridges.

Ink cartridge lamps

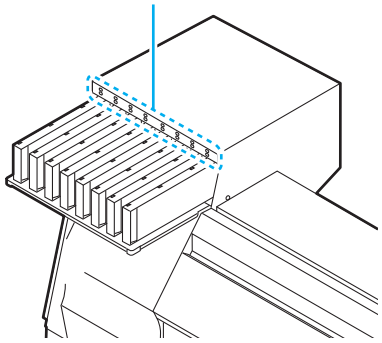

Condition of Lamp		Description
Upper row Red lamp	OFF	No error
	Blinking	One of the following errors occurs. • Ink near-end • Ink end • Expiration of a term of ink validity (one month)
	ON	One of the following errors occurs. • No ink left • No ink cartridge inserted • Other ink errors (☞ P.5-5)
Lower row Green lamp	OFF	No error
	ON	When used with 4-color ink set, the machine supplies ink from the ink cartridge with lower ink. (☞ P.3-36) In this case, the cartridge being used lights in green.

Caution in handling of ink cartridges

- Use genuine ink cartridges for this machine. This machine functions by recognizing the genuine ink cartridges. In case of troubles caused by modified ink cartridges or the like, it shall be out of the warranty even within the warranty period.
- If the ink cartridge is moved from a cold place to a warm place, leave it in the room temperature for three hours or more before using it.
- Be sure to thoroughly consume the ink in the ink cartridge, once it is opened, within three months. If an extended period of time has passed away after opening the cartridge tank, printing quality would be poor.
- Make sure to store ink cartridges in a cool and dark place.
- Store ink cartridges and waste ink tank in a place that is out of the reach of children.
- Request an industrial waste processor for processing of empty ink cartridges.
- Do not shake ink cartridges violently. This may result in ink leakage from the ink cartridges.
- Never refill the ink cartridges with ink. This may result in troubles.
  MIMAKI will not bear any responsibility for any damage caused by the use of the ink cartridges refilled with ink.
- Do not touch or stain the contacts of the ink cartridge. This may cause damages on printed circuit boards.
- Do not disassemble the ink cartridges.

Media

Usable media sizes and notes for handling are described.

Usable sizes of media

Model		TS34-1800A
Type of Recommended media		Photo paper/PET/Artificial paper/Transfer paper
Maximum width		1910mm
Minimum width		210mm
Maximum printing width		1900mm
Roll media	Thickness	1.0mm or less
	Roll outside diameter	ϕ180mm or less
	Roll weight	25kg or less
	Roll inside diameter	3 or 2 inches
	Side printed	Side facing outward
	Roll end treatment	The roll end is gently fixed to the core with weak-adhesive tape or weak glue for easy removal.

Caution in handling of medias

Pay attention to the followings for handling of medias.

Important!

- **Use media recommended by MIMAKI to ensure reliable, high-quality printing.**
  Set the heater temperature to meet the characteristics of the media.
- **Pay attention to the expansion and contraction of the media.**
  Do not use media immediately after unpacking. The media can be affected by the room temperature and humidity, and thus it may expand and contract.
  The media have to be left in the atmosphere in which they are to be used for 30 minutes or more after unpacked.
- **Do not use curled media.**
  This may result in paper jamming.
  If a regular-sized coated sheet of media is rolled and stored, the coated side has to face outside.
- **Be careful to dusts on the edge face of the media.**
  Some rolls have dusts contained in the package gathered on the edge surface of the roll. If you use as it is, the drawing quality may be degraded due to nozzle missing or ink drops. Be sure to set the roll after removing dusts adhering on the edge face of the roll.

Menu mode

This machine has 4 modes. Each menu mode is described below.

NOT-READY mode

This is the mode in which the media has not been detected yet.
The keys other than the [REMOTE] key and the /[TEST PRINT] key are effective.

LOCAL mode

Local mode is the mode for the drawing preparation state.
All the keys are effective.
The machine can receive data from the computer.However, it does not perform printing.

Screen display in Local mode

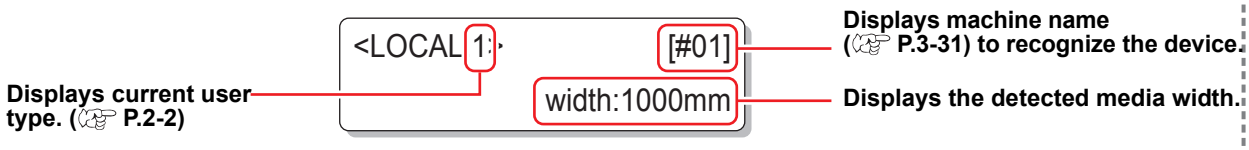

This mode permits the following operations:

- Pressing the JOG keys to set up a drawing origin and drawing area.
- Pressing the [TEST PRINT] key to perform [TEST DRAW].
- Pressing the [CLEANING] key to execute the cleaning of the heads.
- Pressing the [FUNCTION] key to set functions.
- Pressing the [ENTER] key to check the remaining amount of ink, the description of the cartridge error, the model name, the firmware version, and so on.
- Pressing the [REMOTE] key to switch between [REMOTE mode] and [LOCAL mode].
- Pressing the [DATA CLEAR] key to erase the printing data the machine has received.
- Pressing the [USER TYPE] key to change the user type.
- Pressing the [ST.MAINTE] key to activate directly [ST.MAINTENANCE], one of the [MAINTENANCE] functions.

FUNCTION mode

To set FUNCTION mode, press the [FUNCTION] key when this machine is in LOCAL mode.
In this mode, printing conditions can be set.

REMOTE mode

This machine prints the data it receives.
During drawing, the drawing is interrupted by pressing the [REMOTE] key.

Chapter 2
Basic Operations

This chapter

describes procedures and setting methods for ink and media preparation, and printing.

About User Types 2-2
Settings That Can Be Registered in User Types 2-2
Using the Registered User Types 2-2
Workflow 2-3
Turning the Power ON/OFF 2-4
Turning the Power ON 2-4
Turning the Power OFF 2-5
Setting a Media 2-6
Adjusting the Head Height 2-6
Setting a roll media 2-8
Take-up device 2-13
Setting leaf media 2-14
Changing the printing origin 2-16
Test Printing 2-17
Test Printing 2-18
Head Cleaning 2-19
About head cleaning 2-19
Perform head cleaning depending on the test printing result 2-19
Printing Data 2-20
Starting a Printing Operation 2-20
Stopping a Printing Operation 2-21
Deleting Received Data (Data Clear) 2-21
Cutting a media 2-22

About User Types

Printing of higher quality prints is available by making (setting of User type) the print set matching to the characteristics of media when this machine is used for printing.
On this machine, 4 types of User type 1 to 4 are settable.

Settings That Can Be Registered in User Types

For the method of registering settings in user types (1 to 4), see P.3-2.

Set items	Reference page	Set items	Reference page
Setting Media compensation	P.3-4	Setting of Refreshing	P.3-23
Setting Print mode	P.3-8	Setting of Adsorption	
Setting Drop position	P.3-6	Setting of Feeding speed level	
Setting of the number of ink layers	P.3-23	Setting of Auto cleaning	P.3-15
Setting of Drying time	P.3-12	Setting of In-printing cleaning	P.3-17
Setting of Auto cut	P.3-23	Setting of Media detection	P.3-20
Setting of Pre-feeding		Setting of Feed origin	P.3-23
Setting of Margins	P.3-13	Setting of MAPS	P.3-21
Setting of Color patterns	P.3-14		

Using the Registered User Types

1 **Press the USER TYPE key in LOCAL.**

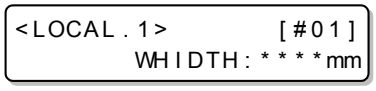

2 **Press ▲ ▼ to select one of the user types (1 to 4).**

- This is also selectable by pressing the USER TYPE key.

3 **Press the ENTER key.**

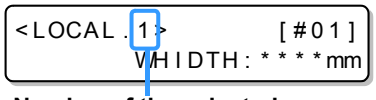

Number of the selected user

For Selecting a User Type without Using USER TYPE key

You can select a user type by using the FUNCTION key in the local without pressing the USER TYPE key.

In the local mode, press the FUNCTION key. → **Press the ENTER key after [SET UP] is confirmed.** → **Select User type (1 to 4) by pressing the ▲ ▼ keys.** → **Press the ENTER key.**

Workflow

1 Turning the Power ON/OFF

Referring to “Turning the Power ON/OFF” (☞ P.2-4).

2 Setting a Media

Referring to “Setting a Media” (☞ P.2-6).

3 Test Printing

Referring to “Test Printing” (☞ P.2-17).

4 Head Cleaning

Referring to “Head Cleaning” (☞ P.2-19).

5 Printing Data

Referring to “Printing Data” (☞ P.2-20).

Turning the Power ON/OFF

Turning the Power ON

This machine is provided with the following two power switches:

Main power switch : It is located on the side of this machine.Keep this switch ON all the time.

Power switch : Normally, use this switch to turn the power ON/OFF.
The power switch lights in green when the power is ON and blinks in green when it is OFF.
The nozzle clogging prevention function periodically operates even with the power switch turned OFF when the main power switch is turned ON (the power switch blinks in green).

1 Turn the main power switch ON.

- Set the main power switch located on the side of this machine to the “I” side.

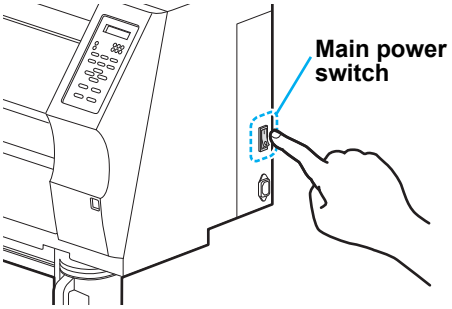

- The firmware version is displayed when the power is turned ON.
- The machine performs its initial operation.

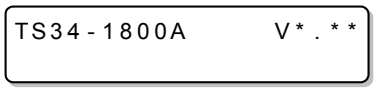

2 The machine enters LOCAL.

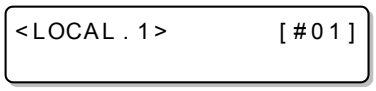

3 Turn ON the power of the connected PC.

Important!

- Turn the power ON after the front cover and maintenance cover are closed.
- The head nozzle may result in nozzle clogging if the main power switch is left OFF for a long time.

Turning the Power OFF

When having ended the operation of the machine, turn the power OFF by pressing the power switch located on the front side.
Check the following items when turning the power OFF.

- If the machine is receiving data from the PC or if there is any data that has not been output yet
- If the head has returned to the capping station
- If any error has occurred （☞ P.5-9 “Error messages”）

1 **Turn OFF the power of the connected PC.**

2 **Press the power switch to turn the power OFF.**

- The power switch blinks in green.
- Do not turn OFF the main power switch located on the side of the machine.
- To use this machine again, light the green lamp by pressing the power switch.

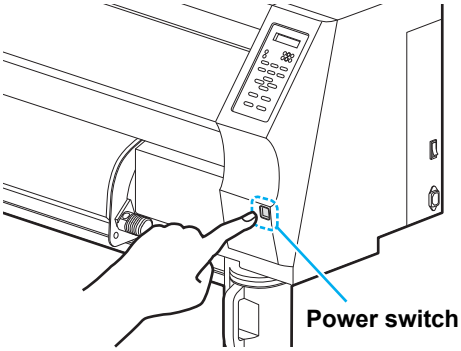

Cautions about Turning the Power OFF

● Do not turn the main power switch OFF.

When the main power switch is ON, the power periodically turns ON and the nozzle clogging prevention function (flushing function) operates.
When the main power switch has been turned OFF, the auto maintenance functions, such as flushing, do not operate, and this may cause nozzle clogging.

● Keep the front cover and the maintenance cover closed.

If the cover is opened, the auto maintenance function such as the flushing function does not work.

● Turn the power OFF after having checked the position of the head.

If the power is turned OFF in a state where the head has not returned to the capping station, the ink head dries, which may cause nozzle clogging.
In this case, turn the power ON again and check that the head has returned to the capping station, and then turn the power OFF.

● Do not turn the power OFF during printing.

The head may not return to the capping station.

● After having turned the power switch OFF, turn the main power switch OFF.

When turning the main power switch off for moving the machine or for solving the error or the like, press the power switch on the front of the machine, check the display is turned off on the operation panel, and then turn the main power switch off.

Setting a Media

This machine can be used with a roll media and leaf media.
For usable medias, refer to P.1-14 “Usable sizes of media”.

Adjusting the Head Height

Adjust the head height according to the thickness of the media you use.

Important!

- Adjust the head height prior to setting the media.If the head height is adjusted after the media is set, this may cause a media jamming, deterioration of the print quality or head damage.
- The range of the initial head height is adjustable by 2 levels according to the purpose of use.
- The range of the printing height of this machine is from L range (2 mm/3 mm) to H range (3 mm/4 mm). (Set to L range 2 mm at shipping)
- If the print quality is set to "Bi-D" (☞ P.3-10), perform "Dot position correction" of the type registration after the head height is adjusted.(☞ P.3-6)

1 Move the carriage to the platen.

- When the device is turned ON
  :Execute [ST.MAINTENANCE - CARRIAGE OUT] of the Maintenance functions.(☞ P.4-5 Step1,2)
- When the device is turned off :
  Open the front cover, then move the carriage by hand.

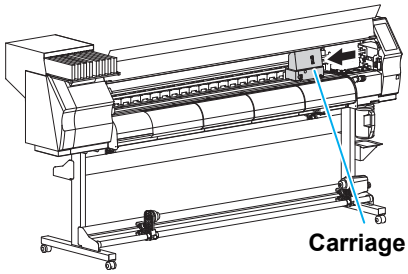

2 Loosen the screw in front.

- Loosen the screws, rotating each by one turn of a standard screwdriver.

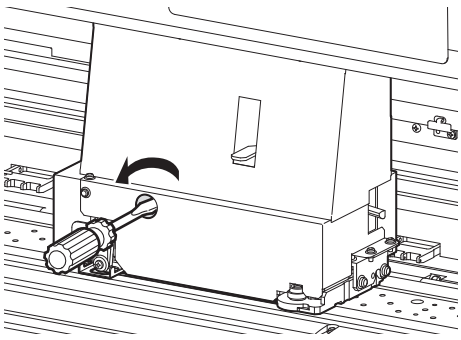

3 Raise the lever of the right side of the carriage.

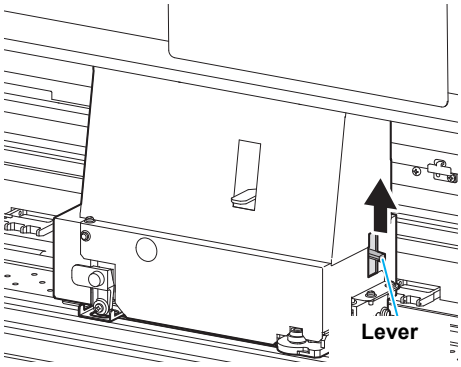

4 Adjust the height-adjusting lever according to the media.

- Adjust the position of the lever, referring to “For the Adjusting Lever and the Range”.
- Set the height-adjusting lever to the highest stage or the lowest stage.Setting it to the intermediate height, a printing fault can result.

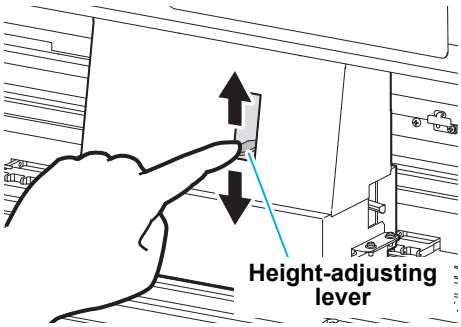

5 Fix the carriage while holding the height-adjusting lever.

- By moving the lever of the right side of the carriage downward and fastening the screw in front, you can fix the carriage.
- Be sure to fix the carriage while holding the height-adjusting lever. Otherwise, you cannot fix the head at the proper position.
- Fasten the screw securely.

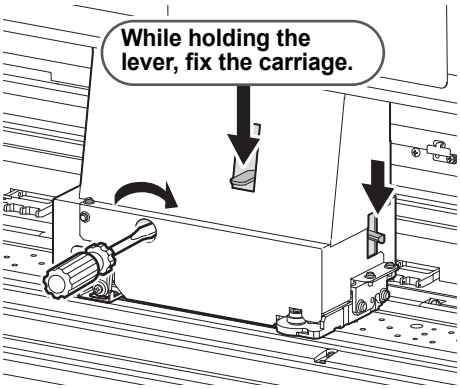

6 Return the carriage to the station position.

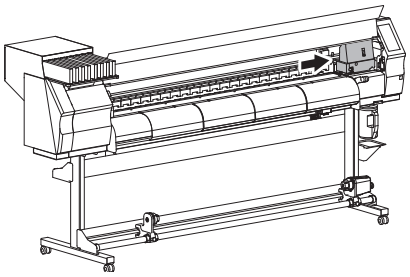

For the Adjusting Lever and the Range

Range	Height-adjusting lever	Head height	Switching area	
L range (General printing)	Thin	2mm (The set position at shipping)	Switch by user	Contact our sales office for switching L ↔ H by field person.
	Thick	3mm		
H range (Transfer type printing)	Thin	3mm		
	Thick	4mm		

- Set the lever to "Thick" when the media is prone to gather dust in the head or is often stained with ink traces.

Caution

- When the ink is changed from dye ink to other aqueous ink, or on the contrary, after the machine is installed, the adjustment is required for the head initial height (H/L range). Consult with our sales office about it.

Setting a roll media

Set a roll media to the roll media hanger located on the back of this machine.

Caution

- Take care not to drop the media on a foot or so when the media is set. It may cause an injury due to the media.
- The roll stopper arm works with the clamp lever. Do not push the clamp lever down while roll stopper is caught between the roll stopper arm and this machine. The roll stopper arm might be broken and roll stopper function *1 might be disabled.

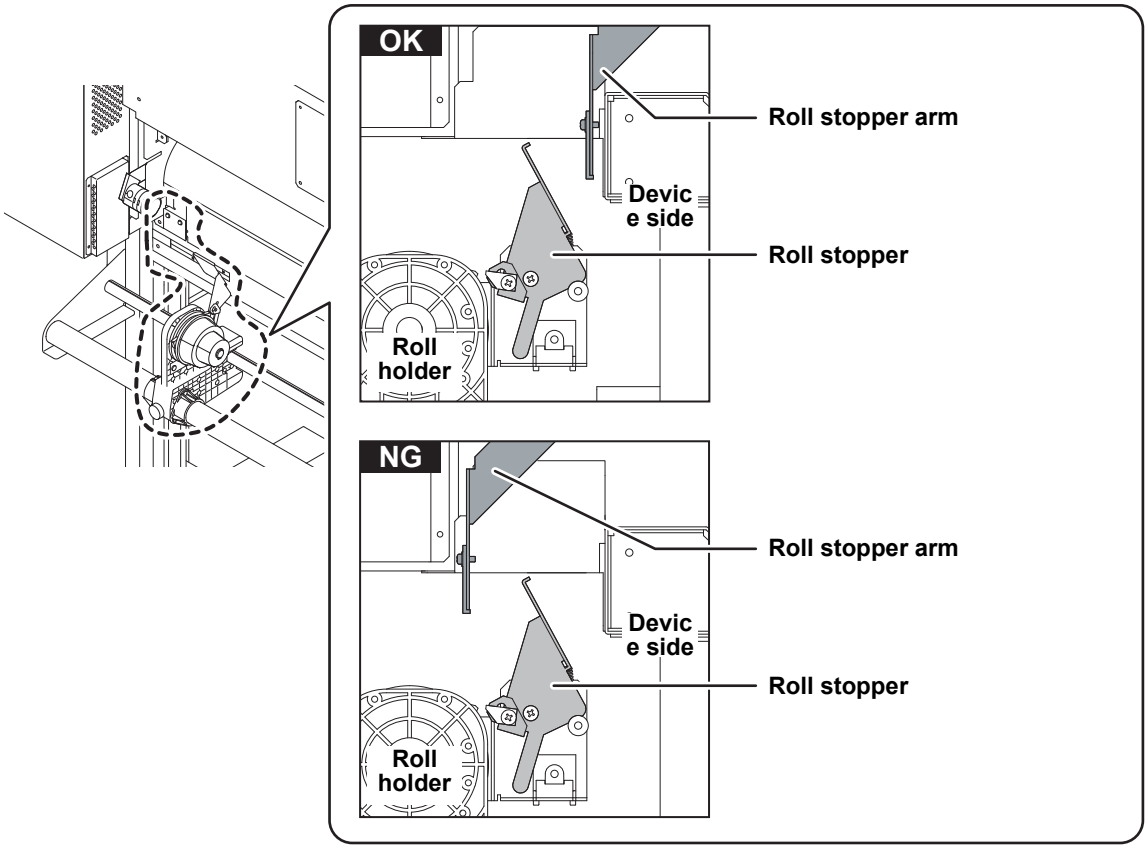

*1. The function that once pulled out a certain amount of media, media pullout is temporarily locked.

1 Move the roll holder located in the back of the device to the direction of the middle of the device.

- Loosen the roll holder fixing screw and then move it.

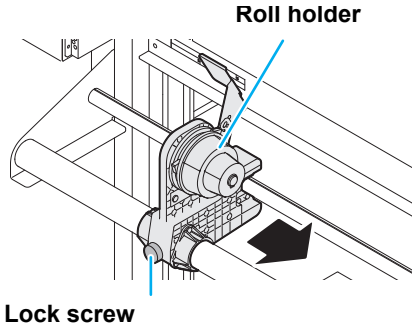

2 Check the clamp lever is lowered.

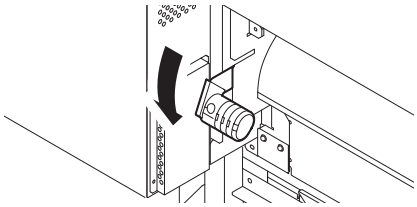

3 Move the roll holder to the roll setting position.

Set the base position of roll holder within this range.

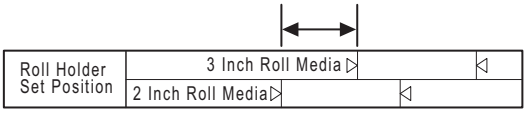

- There are two types of the internal diameter of the roll media paper tube: 2 inch and 3 inch.

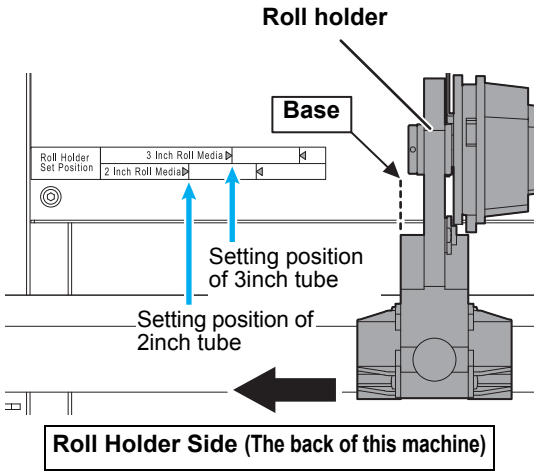

- Check the roll stopper is not caught between the roll stopper arm and this machine.

4 Tighten the roll holder fixing screw.

- Check the Step 2 to 3 again.

5 Set the left end of the core of the roll media on the left roll holder.

- Push the roll media onto the roll holder until the roll core is all the way seated.

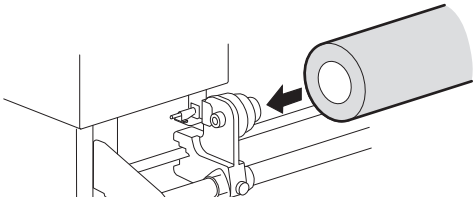

6 Loosen the screw of the right side roll holder then insert the holder into the core of the roll media.

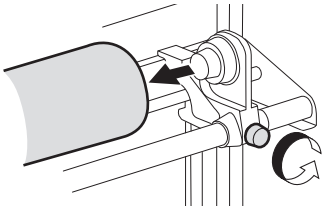

- There is the roll guide holder channel at the center of this machine to support the roll guide so that it will not bend even if heavy roll media is set.
- You cannot move the right side roll holder to the left side of the roll guide holder channel.
  When setting shorter media, if the right side roll holder contacts with the roll guide holder channel, loosen the screw at upper part of the channel and move it to the left. At this time, move the roll guide holder channel near to the right side roll holder.

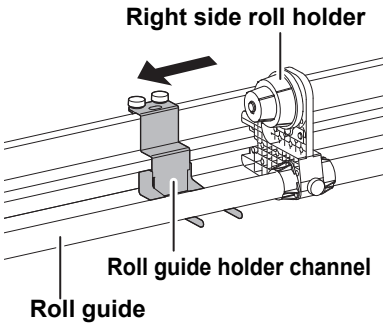

7 Raise the clamp lever in the rear of this machine.

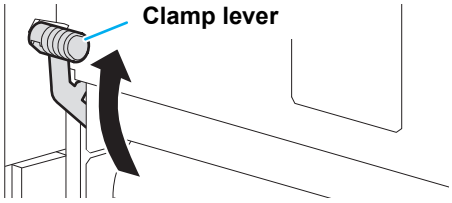

8 Insert the roll media in this machine.

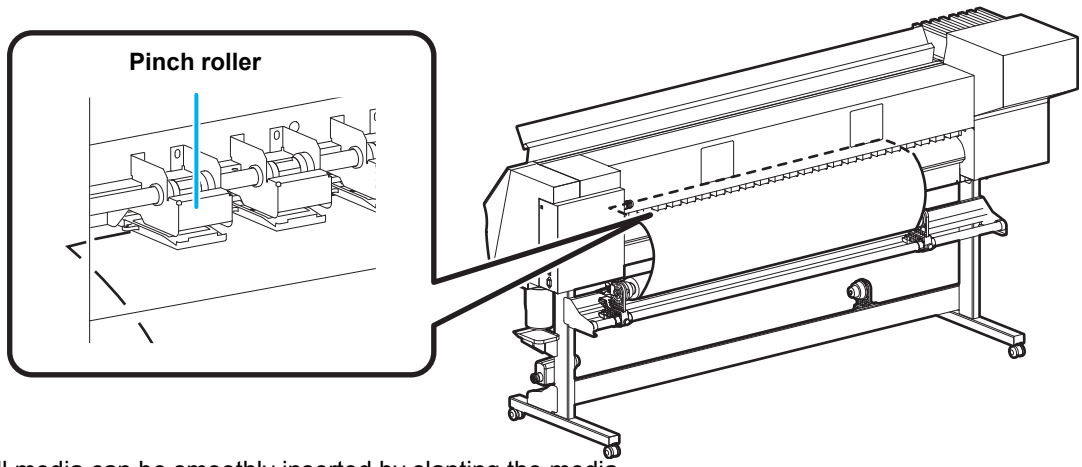

• The roll media can be smoothly inserted by slanting the media.

(1) Pull the media out of the roll to the head of the platen.
(2) Insert the media between the platen and the pinch roller.
  • Pull the media out of the roll so that the media can be grasped from the front of the machine.
(3) Push down the clamp lever from the back of this machine.
  • The media is held.

9 Pull out the roll media out.

(1) Open the front cover.
(2) Raise the clamp lever from the front of this machine.
(3) Pull out the roll media gently and then stop pulling when locked lightly.

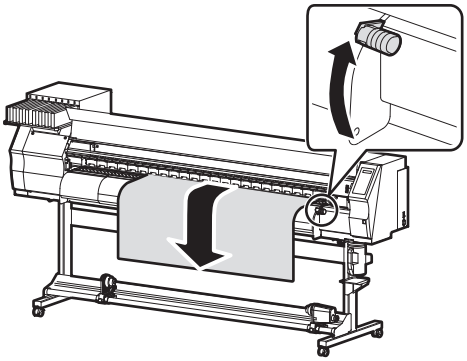

10 Make the roll media even then lower the clamp lever.

• Pulling several positions of the media lightly, Lower the clamp lever after confirming that the amount of the roll media pulled out is almost even.

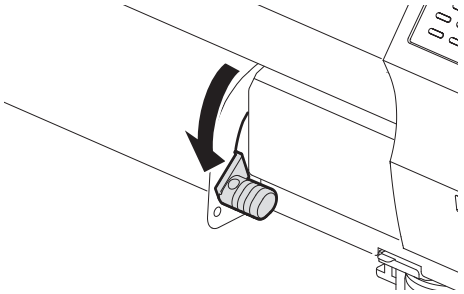

11 Hold the media with the media press gently.

- Set the media so that no media sticks out from the right end pinch roller to the right side.
- When using a thick media, remove the media press from the media before printing.

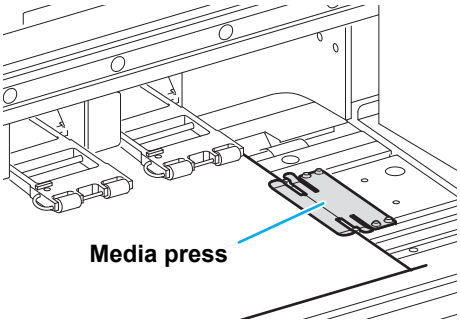

Caution

- Do not set media at the position which the media press touches the side plate on the right. As media may tilt and be lifted, it could break the head.
- If a media is misaligned to the right more than fixed position, a warning is displayed. Set the media again.

```
***** ERROR 50 *****
MEDIA SET POSITION
```

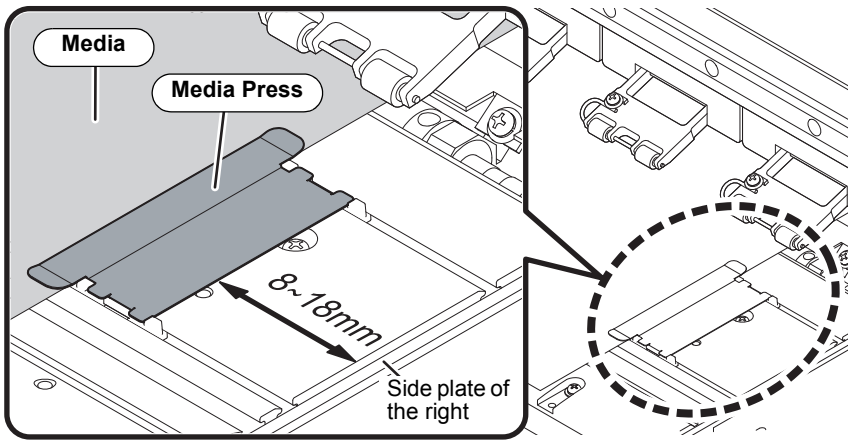

Media press position : 8 to 18 mm from the side plate on the right.
(For the variation of the inside diameter of media roll, it ranges as above.)

12 Set an empty core of the roll media on the take-up device.

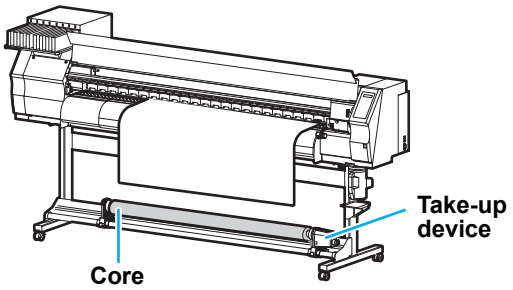

13 Adjust the level adjuster attached to the left take-up device.

(1) Loosen the screw of the level adjuster and move it downward until it hits the floor.
(2) Tighten the screw to fix.

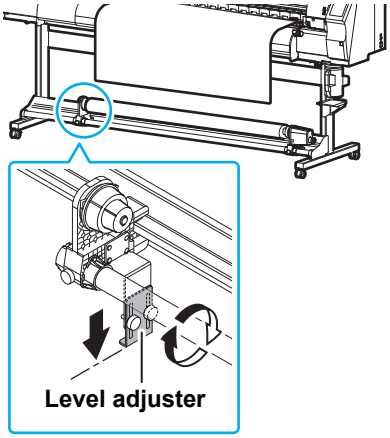

14 **Close the front cover.**

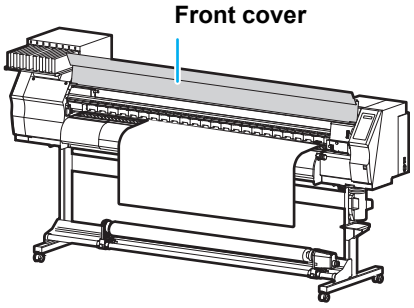

15 **Press the ◀ key to select "ROLL" .**

```
    MEDIA SELECT
ROLL<            >LEAF
```

- Detects the media width.
- When [MEDIA RESIDUAL] of the maintenance function is "ON" (☞ P.4-24), the screen for entering media remaining amount is displayed after detecting the media width.

16 **Secure the media on the take-up device. (☞ P.2-13)**

(1) Feed the media up to the core of the roll media of the take-up device by pressing the ▼ key.
(2) Fix the middle of the media with adhesive tape.
(3) In the same manner, fix the left side and right side of the media.
- Make sure that the there is no slack or wrinkle on the media in such condition that the roll media is pulled to right and left evenly, and then stick the tape.

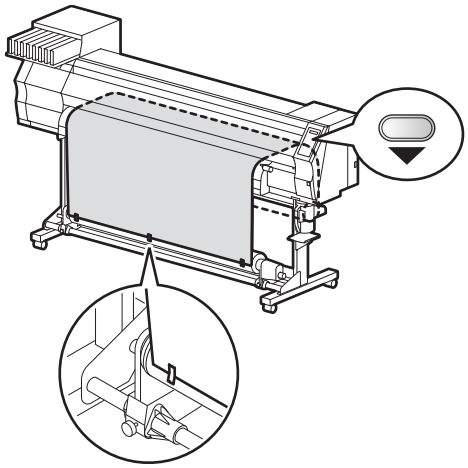

Entering the media remaining amount

When [MEDIA RESIDUAL] of the maintenance function is "ON" (☞ P.4-24), the screen for entering media remaining amount is displayed after detecting the media width.

1 **Display the screen for entering media remaining amount.**

```
Input of MediaLength
MEDIA LENGTH =xxx.xm
```

2 **Press ▲▼ to enter the media remaining amount.**

```
Input of MediaLength
MEDIA LENGTH = 50.0m
```

3 **Press the ENTER key.**

Take-up device

With the switch of the narrow take-up device, select the take-up direction of the media or others.

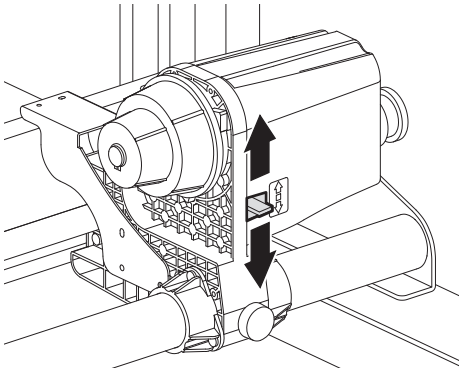

Lever in top position (REVERSE) :
The take-up device winds the media with the printed side facing in.
Lever in middle position (OFF) :
The take-up device does not wind the media.
Lever in bottom position (FORWARD) :
The take-up device winds the media with the printed side facing out.

Setting the torque limiter

The take-up device is provided with a torque limiter.
The take-up torque can be adjusted with the torque limiter.
(The torque limiter is set at the maximum value when shipped from the factory.)
If the tension is too strong to use a thin sheet of media, lower the take-up torque with the torque limiter.

- Clockwise turn :
  Increases torque (a heavy and thicker media such as tarpaulin or the like)
- Counterclockwise turn :
  Decreases torque (For light media)

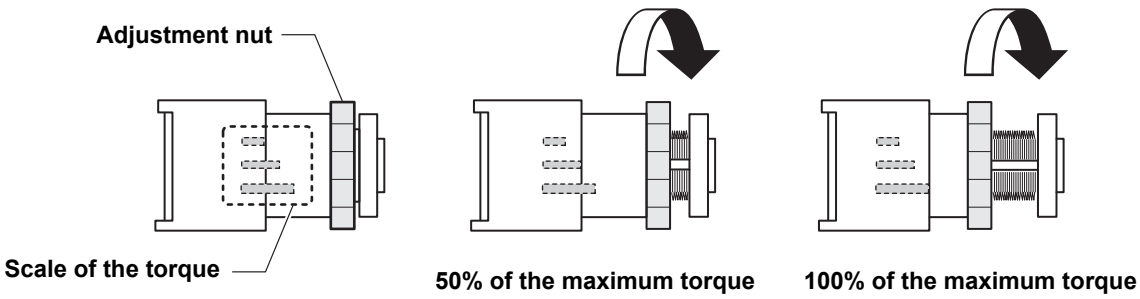

Important!

- **When the torque limiter is adjusted too weak ;**
  The media can not be taken up firmly.
- **When the torque limiter is adjusted too strong ;**
  The slack may occur depending on the media and cause influence on the image quality.

Setting leaf media

Unlike roll media, leaf media does not need to be retained with the roll holders.

1 **Open the front cover.**

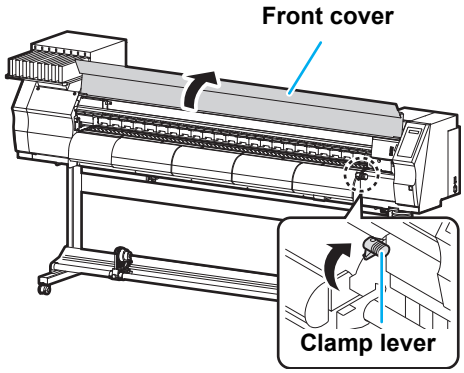

2 **Raise the clamp lever.**

3 **Insert the leaf media between the platen and the pinch rollers.**

- Set the media so that no media sticks out from the right end pinch roller to the right side.

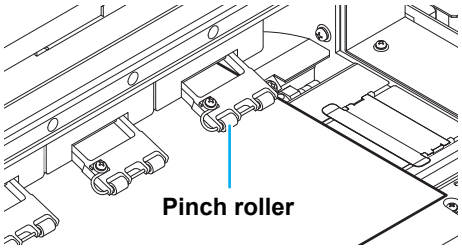

4 **Hold the media with the media press gently.**

- Set the media so that no media sticks out from the right end pinch roller to the right side.
- When using a thick media, remove the media press from the media before printing.

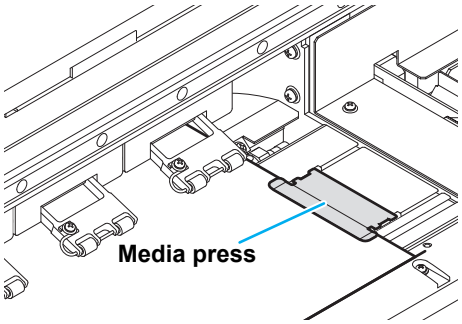

5 **Push down the clamp lever.**

- Set the media straight.

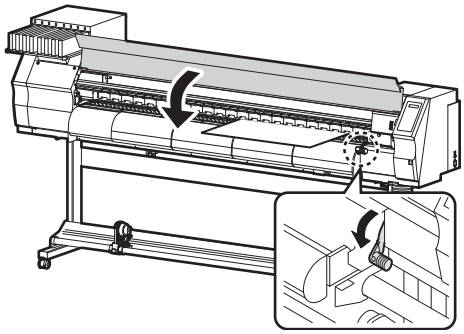

6 **Close the front cover.**

7 **Press the ENTER key.**

8 **Press the ▶ key to select "LEAF" .**

9 **The media detection is started.**

DETECTING MEDIA NOW
PLEASE WAIT

(1) The media width is detected.
(2) The media is fed then the rear end of media is detected.
(3) It returns to the local mode when the detection is completed.

Notes when using media press

Caution

- Do not set media at the position which the media press touches the side plate on the right. As media may tilt and be lifted, it could break the head.
- If a media is misaligned to the right more than fixed position, a warning is displayed. Set the media again.

***** ERROR 50 *****
MEDIA SET POSITION

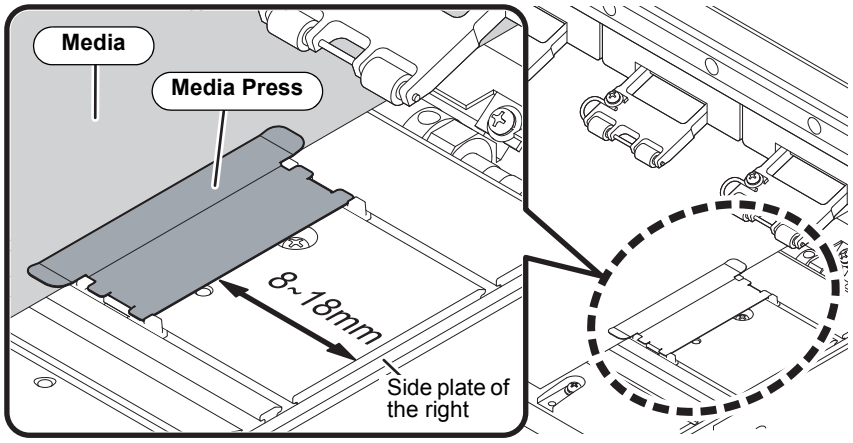

Media press position : 8 to 18 mm from the side plate on the right.
(For the variation of the inside diameter of media roll, it ranges as above.)

Changing the printing origin

The position of the printing origin can be changed.
Moving the LED pointer to the changing position and deciding the position.

- The origin position set above misaligns with the feeding direction of a media by a few centimeters. Turn [FEED ORIGIN] “ON” in setup mode to fit the origin to the correct light position of LED pointer. (☞ P.3-3)

1 **In Local, Press ▲ ▼ ◀ ▶.**

- It enters into the origin setting mode.

```
ORIGIN SETUP
0.0      ----
```

2 **Set a light point of the LED pointer to the changing position by pressing ▲ ▼ ◀ ▶.**

- Select the carriage and media, moving the point with ▲ ▼ ◀ ▶.

```
ORIGIN SETUP
0.0      0.0
```

Origin (Length) Origin (Width)

3 **After determining the origin, press the ENTER key.**

- The printing origin is changed.

```
ORIGIN SETUP
** ORIGIN **
```

Typical setting position of printing origin

The printing origin in the depth direction (X') is positioned at about 75 mm rearward from the slot for cutting on the platen. The printing origin in the scanning direction (Y') is positioned at 25 mm from the right end of the media. The value in the scanning direction (Y') can be changed using [MARGIN] in FUNCTION mode. (☞ P.3-3) This can be changed by using the Jog key.

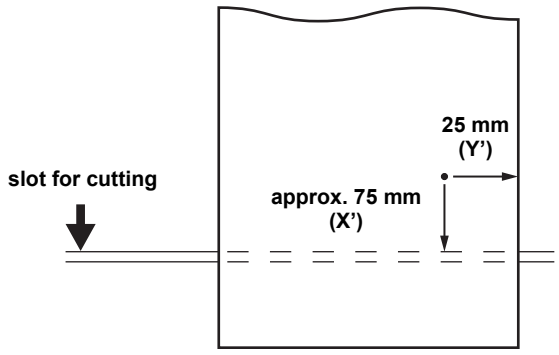

Test Printing

Print a test pattern to check that there are no discharging defects such as nozzle clogging (slight touching of ink or nozzle missing).

Relationship between head row and test pattern

The relations between head row and test pattern print position are as follow.

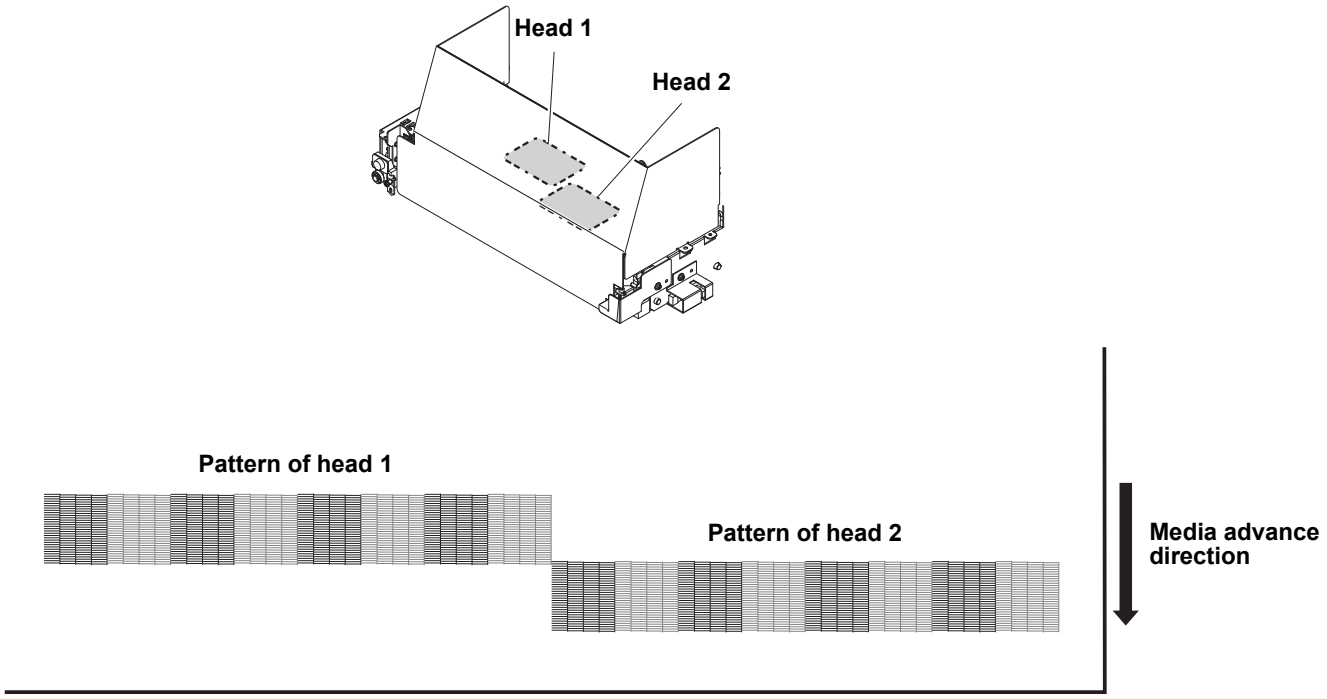

Note on test printing

Important!

- When using leaf media, set a media of more than A3 size put horizontally.
- When using a roll media, rewind the media by hand before printing so that it is not loose. When the roll media has not been rewound tightly, it may cause image quality to deteriorate.

Test Printing

Print a test pattern to check that there are no discharging defects such as nozzle clogging (slight touching of ink or nozzle missing).

In addition, you can select the orientation of the test pattern to print from two types in order to perform test printing repeatedly. Select one depending on your use.

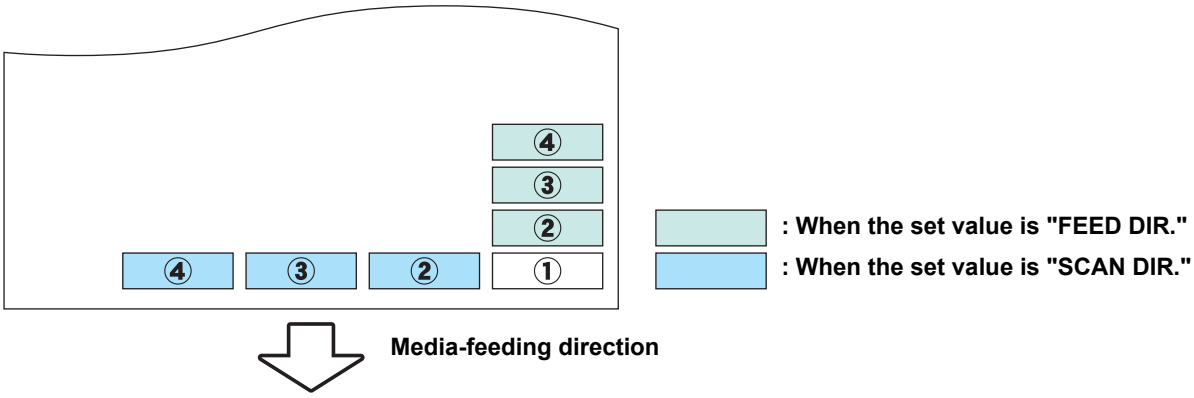

Check before test printing.	• If a media has been set (☞ P.2-6	• If the origin position has been set
	• If the head gap has been adjusted (☞ P.2-6	

1 Press the TEST PRINT key in LOCAL.

- Press ▲ ▼ to change the test pattern orientation.The orientation selected here will be reflected on when you will print next time.
- When performing test printing after having changed the orientation from "SCAN DIR." to "FEED DIR.", the line is fed to the position of the first test printing.

```
TEST PRINT
(FEED DIR.)      <ENT>
```

2 Press the ENTER key.

- Test printing starts.

```
** TEST PRINT **
PLEASE WAIT
```

- When the printing has been completed, the screen returns to LOCAL.

```
<LOCAL.1>        [#01]
          WIDTH:****mm
```

3 Check the printed test pattern.

- When the result is normal, end the operation.
- When the result is abnormal, perform head cleaning.（☞ P.2-19）

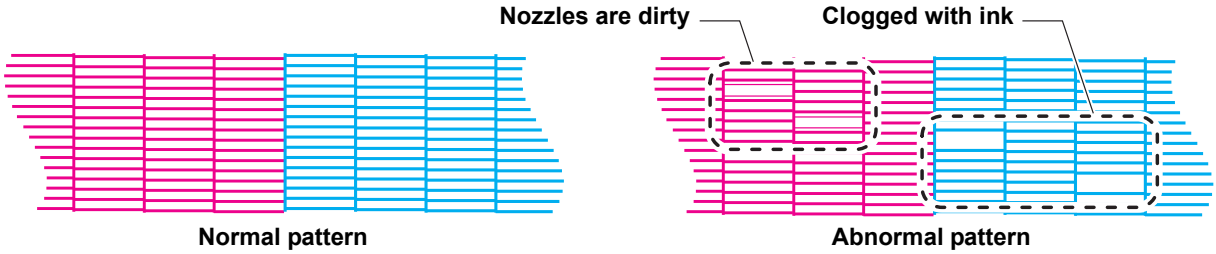

Head Cleaning

About head cleaning

Check the printed test pattern result and perform cleaning depending on the status.
Select one from the three types below:

NORMAL : When any line is missing
SOFT : When only head wiping is needed (when lines are bent)
HARD : When poor image quality cannot be improved even by NORMAL or SOFT cleaning

Perform head cleaning depending on the test printing result

There are three types of head cleaning. Use one by checking the test pattern.

1 **In Local, Press the CLEANING key.**

```
CLEANING
TYPE              :NORMAL
```

2 **Press ▲ ▼ to select the cleaning type.**

```
CLEANING
TYPE              :HARD
```

NORMAL : Select this if any line is missing.
SOFT : When only head wiping is desirable. (in case of bent lines)
HARD : Select this if inferior printing cannot be improved even by [NORMAL] or [SOFT] cleaning.

3 **Press the ENTER key.**

```
CLEANING ACTIVE
00:00
```

- The rest of the cleaning time is indicated at the lower of the display.
- On completion of cleaning, this machine returns to LOCAL.

4 **Perform test printing again, and check the result.**

- Repeat the cleaning and the test printing until the drawing result becomes in normal.

When the image quality is not improved after the head cleaning.

- Clean the wiper and ink cap. (☞ P.4-5)
- Wash the head nozzle. (☞ P.4-8)
- Solve the failure of the image quality, referring to When Nozzle Clogging Cannot Be Solved. (☞ P.4-16)

Starting a Printing Operation

Important! • When using a roll media, rewind the media by hand before printing so that it is not loose.When the roll media has not been rewound tightly, it may cause the image quality to deteriorate.

1 Setting a Media (☞ P.2-6)

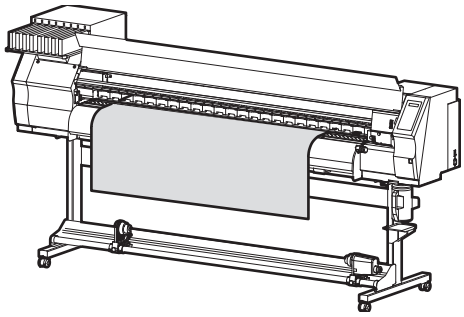

2 Press the REMOTE key in LOCAL.

- The screen changes to REMOTE, and data can be received from the PC.

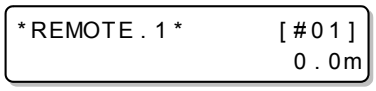

3 Transmit data to be printed from the PC.

- The ACTIVE lamp blinks and the printing conditions are displayed.
- For the method of data transmission, see the instruction manual for the output software.

4 Start printing.

- The printing speed may change, depending on the width of the set media or the position of the print origin even when the same data is printed. This is because of a difference in resolution.

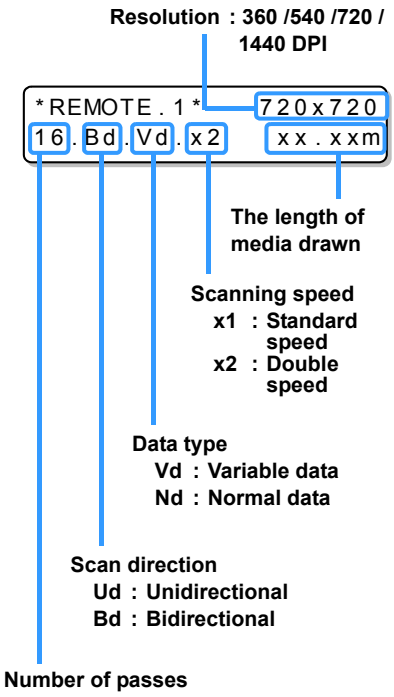

Stopping a Printing Operation

Perform the following operation when stopping a printing operation halfway.

1 **Press the REMOTE key during printing.**

- The printing operation stops.
- Interrupt data sending at the PC side during the data is sent from the PC.
- Printing restarts from the interrupted data by repressing the REMOTE key.

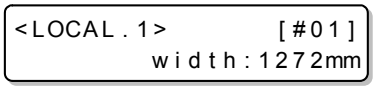

Deleting Received Data (Data Clear)

When you want to stop printing, delete the already received data.

1 **Press the DATA CLEAR key in LOCAL.**

2 **Press the ENTER key.**

- The ACTIVE lamp goes out.
- The received data is erased then it returns to the local mode.

Cutting a media

For a roll media, two ways are available to cut the media after printing is completed, as follows.

Important!
- When a media is cut, be careful that the printed side does not touch the floor or the printed side of other already cut media.
- When using the take-up device, take up a cut media using the switch of the take-up device.

Auto cut

A media is automatically cut after printing is completed.

- In order to activate the automatic cutting function, the setting for it needs to be configured. (For the detailed setting method, refer to P.3-23. The automatic cutting function is set to "HOST" as default.)
- When the automatic cutting function is "OFF", perform the operation in “Manual cut” described later to cut a media.

1 **When printing has been completed, the media is cut automatically.**

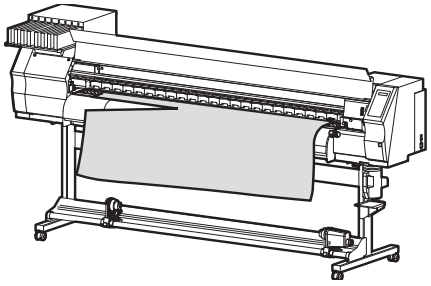

Manual cut

By using the keys on the operation panel, you can cut the media at any position.

1 **In LOCAL, Press ▲ ▼ ◀ ▶.**

- LOCAL changes to the origin setting mode.
- By pressing ▼ , feed the media to the cutting position.

```
ORIGIN SETUP
0.0        ----
```

2 **Press the FUNCTION key.**

```
MEDIA CUT
                <ENT>
```

3 **Press the ENTER key.**

- The media is cut.
- When the cutting has been completed, the current mode returns to LOCAL.

```
MEDIA CUTTING
PLEASE WAIT
```

Chapter 3
Extended Functions

This chapter

describes the operation procedures for using the machine more conveniently and each setting procedure.

About User Types 3-2
Registering All Printing Conditions Together (Type Registration) 3-2
How to Register User Types 3-2
Setting Media Correction 3-4
Setting Media Correction 3-4
If the Positions of Dots Shift... 3-6
Setting the Printing Method 3-8
Setting of the PASS (print quality) 3-8
Setting a Scanning Speed 3-9
Setting a Scanning Direction 3-10
Setting Logical Seek 3-11
Setting Drying Time 3-12
Setting Margins 3-13
Setting Color Pattern 3-14
Setting Automatic Cleaning 3-15
Setting Cleaning during Printing 3-17
Setting the CLEANING 3-17
Setting the WIPING 3-18
Setting Media Detection 3-20
Perform setting to reduce stripes between passes 3-21
Other Settings 3-23
Initializing the Settings 3-24
Machine Settings 3-25
Setting the DRYNESS FEED 3-26
Setting the CONFIRM. FEED 3-27
Setting the Time 3-28
Setting the Units 3-29
Stamp Setting 3-30
Setting the MACHINE NAME 3-31
Setting a KEY BUZZER 3-32
Change the operation condition of the ambient temperature 3-33
Extension of Ink Expiry Month 3-34
Extension of Ink Expiry Month 3-34
Switch Setting of Ink Supply Path 3-36
Confirming Machine Information 3-38
Displaying the Information 3-38

About User Types

Registering All Printing Conditions Together (Type Registration)

This machine allows you to register printing conditions in each of the user types (1 to 4).
Register a printing condition according to each media that you use in a user type beforehand. When you replace one media to another, you can set the optimum printing condition only by changing one user type to another.

Example of Type Registration

Type 1	Photo-paper	Type 3	For PET 2
Type 2	For PET 1	Type 4	Synthetic paper

How to Register User Types

1 **Press the (FUNCTION) key in LOCAL.**

2 **Press the (ENTER) key.**

3 **Press (▲)(▼) to select one of the types (1 to 4) and press the (ENTER) key.**

4 **Select and set each item of "List of Functions".**

- For details on how to set each function, see the reference page contained in "List of Functions".

List of Functions

This section describes the overview of each function to be set and set values that can be registered in user types.
The underlined has been set as default.

Important!

- For each setting item below, you can set it so that the machine may operate according to the value specified when you printed from your RIP software in the connected host PC.
  Set Item : PRINT MODE / INK LAYERS / DRYING TIME / AUTO CUT/ PRE-FEED / MARGIN / COLOR PATTERN / REFRESH / VACUUM / Feed SPEED LEVEL
- When you operate the machine according to the contents specified with the RIP software, set each item to “Host” when registering this machine type. When you set it other than “Host”, the machine operates according to the machine setting.
- For the specifying method with the RIP software, refer to the operation manual of the RIP software.

Function name	Set value	When no instruction from RIP exists *1	Outline
MEDIA COMP. (☞ P.3-4)	-255 ~ 0 ~ 255	———	Used to print a pattern for correcting a media-feeding rate and correct it.
DROP. POS CORRECT	-40.0 ~ 0 ~ 40.0	———	Used to adjust the dot position in go and return printing.

Function name				Set value	When no instruction from RIP exists *1	Outline
PRINT MODE (☞ P.3-8)	PASS			HOST / STD / FAST / FINE	STD	Sets a print quality level and printing direction.
	SCAN DPEED			HOST / STD / FAST	FAST	
	SCAN DIRECTION			HOST / Bi-D / Uni-D	Uni-D	
	LOGICAL SEEK			HOST / ON / OFF	ON	
INK LAYERS (☞ P.3-23)				HOST /1 ~ 9	1	Sets the number of layers in which ink is to be applied.
DRYING TIME (☞ P.3-8)	SCAN			HOST /0.0 ~ 19.9 sec	0 sec	Sets the time to wait for ink drying.
	Draw. END			HOST /0 ~ 999 sec	0 sec	
AUTO CUT (☞ P.3-23)				HOST /ON / OFF	OFF	Cuts the media automatically after printing.
PRE-FEED (☞ P.3-23)				HOST /ON / OFF	OFF	Feeds the media back and forth before printing. When sticky media is used, select ON.
MARGIN (☞ P.3-13)	LEFT			HOST / -10 ~ 85mm (1mm unit)	0 mm	Sets a non-printing area along the right and left edges of the media.
	RIGHT			HOST / -10 ~ 85mm (1mm unit)	0 mm	
COLOR PATTERN (☞ P.3-14)				HOST / ON / OFF	OFF	Prints the color pattern on the media right edge.
REFRESH (☞ P.3-23)				HOST / Level 0 (Refresh interval long) ~ 3 (Refresh interval short)	Level 3	Refreshes the print heads during printing.
VACUUM (☞ P.3-23)				HOST / STANDARD / WEAK / Little WEAK / STRONG / OFF	STANDARD	Sets the absorbability of the media.
FeedSPEED LEVEL (☞ P.3-23) *2				HOST / 10 ~ 200% 10%..... 6mm/sec 100%..... 60mm/sec 200%..... 120mm/sec	100	Changes the media feeding speed in printing.
AUTO CLEANING (☞ P.3-15)	ON	INTERVAL		10 ~ 1000 ~ 30000 mm	———	Sets the auto cleaning of the print head every completion of printing.
		TYPE		NORMAL / SOFT / HARD	———	
	OFF				———	
Print. CLEANING (☞ P.3-17)	CLEANING	ON	INTERVAL	10 ~ 1000 ~ 30000 mm	———	Sets the auto cleaning of the print head in printing.
			TYPE	NORMAL / SOFT / HARD	———	
		OFF			———	
	WIPING	SCAN COUNT		0 ~ 9990	———	Sets the wiping operation during printing.
		TEMP. difference		0 ~ 60	———	
MEDIA DETECT (☞ P.3-20)	DETECT METHOD			SELECT / WIDTH	———	Sets the method for detecting the media.
	CUTTING DETECT			NONE / BOTH EDGE / LEFT EDGE / RIGHT EDGE	———	
FEED ORIGIN (☞ P.3-23)				ON / OFF	———	Setting the media feeding direction to LED pointer when changing the printing origin position.
MAPS (☞ P.3-21)	ON / OFF				———	Perform setting to reduce stripes between passes.
	PRINT SPEED ADJUST			-50 ~ 0 ~ +50%	———	

*1. This is the setting value to be used for printing when setting value is not specified at the RIP software (host) side, or, you give priority to the setting value at the machine side, even if you set “Host” to the type registration of this machine.

*2. When “ON” is set to “Select device” in “Setting of feeding and take up” of the machine setting, the feeding speed is limited on max.150%.

Setting Media Correction

Correct the feeding rate of media after the type of media is replaced.
If the correction value is not appropriate, stripes may appear on the printed image, thus resulting in a poor printing.

Important!

- On completion of [MEDIA COMP.] during use of a roll media, the media returns to the printing origin. Then the roll media in the rear of this machine will slacken.
  Before printing, take up the slack in the roll media by hand; a loose roll media can result in an inferior image quality.
- When printing with a take-up device, set the media first and then perform media correction.

Setting Media Correction

A pattern for media correction is printed and a media-feeding rate is corrected.

- Two bands are printed in the correction pattern.
- Make adjustment so that an even color density is obtained in the boundary between the two bands.

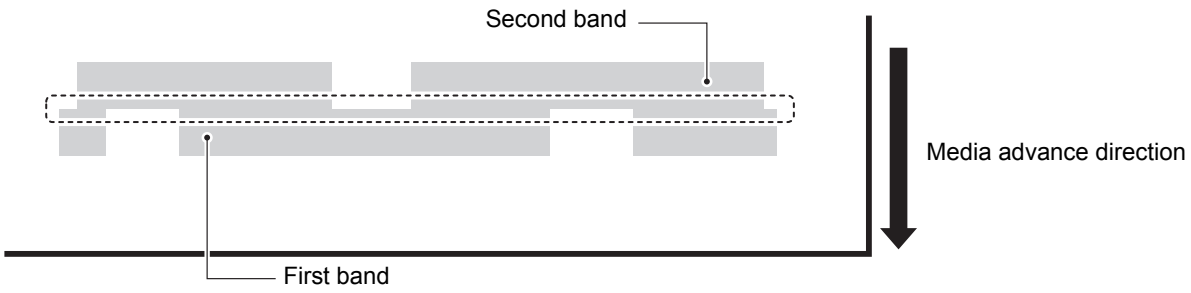

1 **Set a media. (☞ P.2-6)**

2 **Press the FUNCTION key in LOCAL.**

```
FUNCTION
SETUP                <ENT>
```

3 **Press the ENTER key.**

```
SETUP
SELECT          :TYPE.1
```

4 **Press ▲ ▼ to selectone of the user types (1 to 4).**

5 **Press the ENTER key twice.**

```
[1]MEDIA COMP.
PRINT START      :ent
```

6 **Press the ENTER key to print a correction pattern.**

```
PRINTING
PLEASE WAIT
```

7 **Check the correction pattern and enter a correction value.**

Enter a correction value in "+" : The boundary between the two bands is widened.
Enter a correction value in "-" : The boundary between the two bands is narrowed.
• When you change the correction value by "30", the width of the boundary changes by about 0.1 mm.

8 **Press the ENTER key.**

• Print a correction pattern again and check it.
• When media correction is needed, perform the operation in Step 7 to make correction.

9 **Press the END key several times to end the setting.**

Correcting Media-feeding during Printing

A media-feeding rate can be corrected even in the remote mode or when image data is printed.

1 **Press the FUNCTION key in the Remote.**

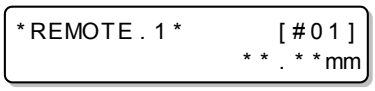

2 **Press the ENTER key.**

3 **Press ▲ ▼ to enter a corrected feeding rate.**

• Corrected feeding rate: -500 to 500
• The value entered here is reflected in the corrected feeding rate soon.

4 **Press the ENTER key.**

• When you press the ENTER key instead of the END key, the value entered here will be invalid.

5 **Press the ENTER key.**

This indicates that the media correction was performed in the remote mode.

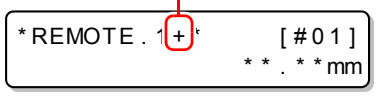

• key. The changed value is registered.
• When you press the ENTER key instead of the END key, the value entered here will be valid temporarily.(When you perform media detection again or turn the power OFF, the correction value is cleared.)

If the Positions of Dots Shift...

When the condition for printing (media thickness/ink type/etc.) has been changed, perform the following operation to correct the ink drop position for bidirectional (Bi) printing and obtain the proper printing result.

Example of a Printed Pattern

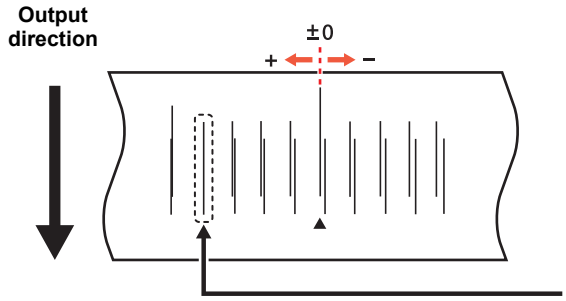

The dots at the fourth position counted from the zero position in the positive direction form a straight line. In this case, the dot position correction value is 4.0.

1 **Set a media on the machine and set a printing origin. (☞ P.2-6)**

- In order to print a pattern, a media that is 500 mm wide and at least 400 mm long is necessary.

2 **Press the FUNCTION key in LOCAL.**

```
FUNCTION
SETUP                <ENT>
```

3 **Press the ENTER key.**

```
SETUP
SELECT          :TYPE.1
```

4 **Press ▲ ▼ to select one of the types (1 to 4) and press the ENTER key.**

5 **Press ▲ ▼ to select [DROP POSITION].**

```
[1]
DROP POSITION    <ent>
```

6 **Press the ENTER key.**

```
[1]DROP POSITION
PRINT START       :ent
```

7 **Press the ENTER key to start pattern printing.**

- Multiple test patterns are printed. (The printed patterns are called Pattern 1, Pattern 2, Pattern 3... in the order of printing.)

```
      PRINTING
PLEASE WAIT
```

8 **Press ▲ ▼ to correct the dot position of Pattern 1.**

- Corrected feeding rate: -40 to 40
- Check the test patterns. The position where an outward feeding line and a return feeding line become one straight line is the correction value.
- When the correction value in not between -40 and 40, adjust the height of the printing heads and then perform the operations in Step 2 and later.
- 2 types of the correction value is available depending on the head height.

Displays the current head height.
(H)... High (thick)
(L)... Low (thin)

9 **Press the ENTER key.**

10 **In the same way as in Step 8, correct the dot position in Pattern 2 and subsequent patterns and press the ENTER key.**

11 **Press the END key several times to end the setting.**

Setting the Printing Method

In the printing method setting, the following items are set:

- **PASS** : The pass (printing quality) for printing is set.
- **Scanning speed** : The scanning speed for printing is set.
- **Scanning direction** : A printing direction is set.
- **Logical seek** : ON/OFF of Logical seek is set.

Important!

- You can set the printing method setting so that the machine may operate according to the value specified when you printed from your RIP software (RasterLinkPro) in the connected host PC.
- When you give priority to the setting at the RasterLinkPro side, make the setting value “Host”.
- “PASS / SCAN DPEED / SCAN DIRECTION” set in this machine are displayed as “Pass / Fast Print / Print Direction” respectively in the RasterLinkPro.
- You cannot specify the logical seek at the RasterLinkPro side. When you set this machine to “Host”, printing will be performed in “LOGICAL SEEK=ON” status.

Setting of the PASS (print quality)

1 **Press the FUNCTION key in LOCAL.**

2 **Press the ENTER key.**

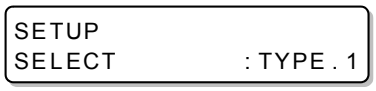

3 **Press ▲▼ to select one of the types (1 to 4) and press the ENTER key.**

4 **Press ▲▼ to select [PRINT MODE].**

5 **Press the ENTER key twice.**

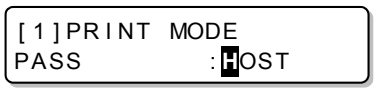

6 **Press ▲▼ to select a PASS (printing quality).**

- Set Value : HOST /FAST/STANDARD/FINE

7 **Press the END key several times to end the setting.**

Settable number of passes depending on resolution

Resolution (dpi) / Set Value	540 x 360 dpi *1	540 x 720 dpi	540 x 1080 dpi	720 x 1440 dpi
FAST	1 pass	4 pass	6 pass	8 pass
STD.	2 pass	7 pass	12 pass	16 pass
FINE	4 pass	16 pass	24 pass	32 pass

*1. This resolution can be used only when using sublimation transfer ink Sb53.

Setting a Scanning Speed

1 **Perform the operations in P.3-8 Steps 1 to 5.**

2 **Press ▲ ▼ to select [SCAN SPEED].**

3 **Press the ENTER key.**

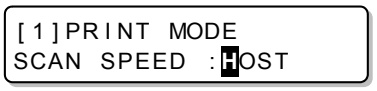

4 **Press ▲ ▼ to select a scanning speed.**

- **Set value** : HOST / STANDARD / Hi-SPEED

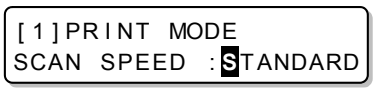

5 **Press the ENTER key.**

6 **Press the END key several times to end the setting.**

Setting a Scanning Direction

1 **Perform the operations in P.3-8 Steps 1 to 5.**

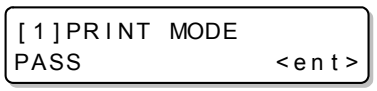

2 **Press ▲ ▼ to select [SCAN DIRECTION].**

3 **Press the ENTER key.**

4 **Press ▲ ▼ to select a scanning direction.**

- **Set value** : HOST / Uni-D / Bi-D

5 **Press the ENTER key.**

6 **Press the END key several times to end the setting.**

Setting Logical Seek

The motion of Head varies depending on the set of Logical-seek.

UNI-DIRECTIONAL

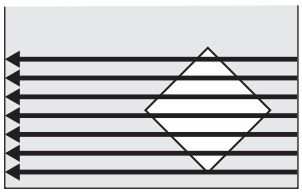

BI-DIRECTIONAL

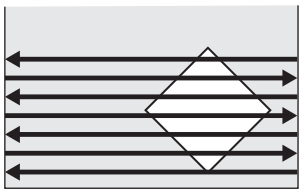

Movement of heads when LOGICAL seek is OFF

UNI-DIRECTIONAL

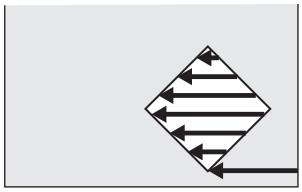

BI-DIRECTIONAL

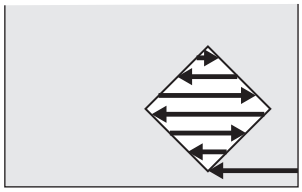

Movement of heads when LOGICAL seek is ON

1 **Perform the operations in P.3-8 Steps 1 to 5.**

```
[1]PRINT MODE
PASS              <ent>
```

2 **Press ▲ ▼ to select [LOGICAL SEEK].**

```
[1]PRINT MODE
LOGICAL SEEK      <ent>
```

3 **Press the ENTER key.**

```
[1]PRINT MODE
LOGICAL SEEK     :HOST
```

4 **Press ▲ ▼ to select a set value.**

- **Set value** : HOST / ON / OFF

```
[1]PRINT MODE
LOGICAL SEEK     :ON
```

5 **Press the ENTER key.**

```
[1]PRINT MODE
LOGICAL SEEK      <ent>
```

6 **Press the END key several times to end the setting.**

Setting Drying Time

In the drying time setting, the following items for ink drying time are set.

- SCAN : Ink drying time for each scanning is set. (During bidirectional printing, the machine stops for a certain period of time specified for each of the outward and return scanning.)
- PRINT END : Ink drying time after printing has been complete is set.

Important!

- When you give priority to the setting at the RasterLinkPro side, make the setting value “Host”.
- “SCAN” set in this machine is displayed as “Pause Time per Scan” in the RasterLinkPro.
- You cannot specify the print end at the RasterLinkPro side. When you set this machine to “Host”, printing will be performed in “PRINT END= 0 sec.” status.

1 **Press the FUNCTION key in LOCAL.**

2 **Press the ENTER key.**

3 **Press ▲▼ to select one of the types (1 to 4) and press the ENTER key.**

4 **Press ▲▼ to select [DRYING TIME].**

5 **Press the ENTER key.**

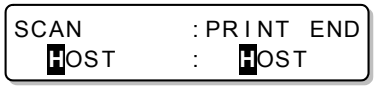

6 **Press ▲▼◀▶ to set drying time.**

- Set the drying time for canning and after printing is completed. To enable the drying time specified in your RIP, select “Host”.
- **Scanning setting value** : Host or 0.0 sec. to 19.9 sec.
- **Print end setting value** : Host or 0 sec. to 999 sec.

Item selecting : by the ◀▶ keys
Time setting : by the ▲▼ keys

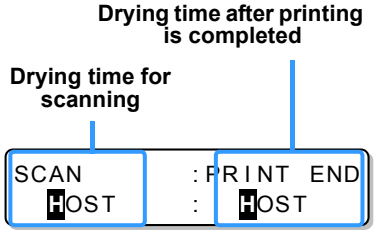

7 **Press the ENTER key.**

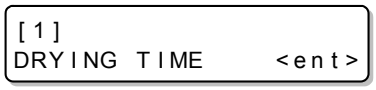

8 **Press the END key several times to end the setting.**

Setting Margins

Set a non-printing area along the right and left edges of the media.
The offset value against the standard margin 15mm is set hereupon.

Important!

- When you give priority to the setting at the RIP software side, make the setting value “Host”.
- You cannot specify the margins at the attached RIP software (RasterLinkPro). When you use the RasterLinkPro, if you set this machine to “Host”, printing will be performed in “Margins for right and left off set value= 0 mm” status.

1 **Press the FUNCTION key in LOCAL.**

```
FUNCTION
SETUP                <ENT>
```

2 **Press the ENTER key.**

```
SETUP
SELECT          :TYPE.1
```

3 **Press ▲ ▼ to select one of the types (1 to 4) and press the ENTER key.**

4 **Press ▲ ▼ to select [MARGIN].**

```
[1]
MARGIN               <ent>
```

5 **Press the ENTER key.**

```
LEFT        : RIGHT
 0mm        :  0mm
```

6 **Press ▲ ▼ ◀ ▶ to set the left and right margins.**

- Set the margins for the left and the right of the media.
  To enable the margins specified in your RIP, select “Host”.

Set Value : HOST or -10 to 85mm (in 1mm increment)
Item selecting : by the ◀ ▶ keys
Margin setting : by the ▲ ▼ keys

7 **Press the ENTER key.**

```
[1]
MARGIN               <ent>
```

8 **Press the END key several times to end the setting.**

Caution

- Pay attention to that printing may start on the media press if a right and left margin is set to 5 mm or less when the media press is used in printing.

Setting Color Pattern

It is set whether a color pattern is printed on the right edge of a media.

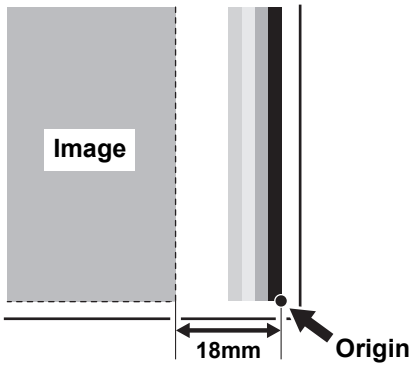

Important! • When you give priority to the setting at the RIP software side, make the setting value “Host”.

1 **Press the FUNCTION key in LOCAL.**

```
FUNCTION
SETUP                <ENT>
```

2 **Press the ENTER key.**

```
SETUP
SELECT          :TYPE.1
```

3 **Press ▲ ▼ to select one of the types (1 to 4) and press the ENTER key.**

4 **Press ▲ ▼ to select [COLOR PATTERN].**

```
[1]
COLOR PATTERN   <ent>
```

5 **Press the ENTER key.**

```
[1]COLOR PATTERN
SETUP           :HOST
```

6 **Press ▲ ▼ to select a set value.**

• **Set Value** : HOST or ON, OFF

```
[1]COLOR PATTERN
SETUP           :ON
```

7 **Press the ENTER key.**

```
[1]
COLOR PATTERN   <ent>
```

8 **Press the END key several times to end the setting.**

Setting Automatic Cleaning

You can set items so that the head cleaning is automatically performed when printing has been completed for the set length.
When printing has been completed, the machine measures the length of a media printed after the previous head cleaning and performs the cleaning automatically if necessary.
The machine can perform a stable printing operation with its heads always kept clean.
The first cleaning is performed immediately before the first printing after the machine is started. Then subsequent cleaning is performed every printing on the specified length of media.

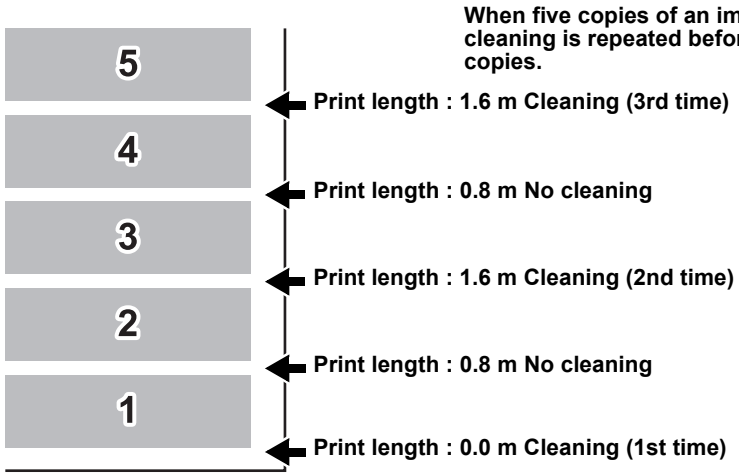

When operation interval is 1000 mm (example)

1 **Press the FUNCTION key in LOCAL.**

```
FUNCTION
SETUP                <ENT>
```

2 **Press the ENTER key.**

```
SETUP
SELECT          :TYPE.1
```

3 **Press ▲ ▼ to select one of the types (1 to 4) and press the ENTER key.**

4 **Press ▲ ▼ to select [AUTO CLEANING].**

```
[1]
AUTO CLEANING   <ent>
```

5 **Press the ENTER key.**

```
[1]AUTO CLEANING
SETUP           :OFF
```

6 **▲ ▼ Press to select ON.**

- When selecting OFF, proceed to Step 9.

```
[1]AUTO CLEANING
SETUP           :ON
```

7 **Press the ENTER key.**

```
INTERVAL    :TYPE
1000mm      :NORMAL
```

8 **Press ▲ ▼ ◀ ▶ to set a cleaning interval and a cleaning type.**

Item selecting : by the ◀ ▶ keys
Interval and Type setting : by the ▲ ▼ keys

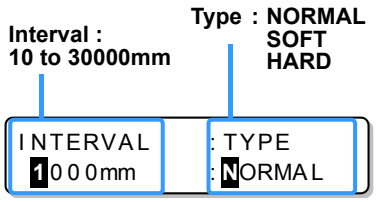

9 **Press the ENTER key.**

10 **Press the END key several times to end the setting.**

Important!

- This function does not operate when ink near-end occurs. See P.1-12 “Changing an ink cartridge” to solve the ink near-end.
- Depending on the state of the heads, etc., the image quality deterioration may not be improved even with this function performed.In this case, contact our service office or the distributor in your region.

Setting Cleaning during Printing

There are two cleaning types during printing.

CLEANING : Automatic head cleaning conducted during printing is set.
WIPING : Automatic wiping during printing is set.

Setting the CLEANING

It is set whether head cleaning is performed automatically during printing.
In cleaning during printing, a cleaning interval is set according to the length of a printed media.
Printing is interrupted each time a media is printed for the set length, and head cleaning is performed automatically during the interval.

1 **Press the FUNCTION key in LOCAL.**

```
FUNCTION
SETUP                <ENT>
```

2 **Press the ENTER key.**

```
SETUP
SELECT          :TYPE.1
```

3 **Press ▲ ▼ to select one of the types (1 to 4) and press the ENTER key.**

4 **Press ▲ ▼ to select [Print.CLEANING].**

```
[1]
Print.CLEANING <ent>
```

5 **Press the ENTER key twice.**

```
[1]Print.CLEANIN
SETUP           :OFF
```

6 **Press ▲ ▼ to select ON.**

- When selecting OFF, proceed to Step 9.

```
[1]Print.CLEANIN
SETUP           :ON
```

7 **Press the ENTER key.**

```
INTERVAL    :TYPE
1000mm      :NORMAL
```

8 **Press ▲ ▼ ◀ ▶ to set a cleaning interval and a cleaning type and press the ENTER key.**

Item selecting : by the ◀ ▶ keys
Interval and Type setting : by the ▲ ▼ keys

Interval : 10 to 30000mm
Type : NORMAL / SOFT / HARD

```
INTERVAL    :TYPE
1000mm      :NORMAL
```

9 **Press the END key several times to end the setting.**

Important!

- This function does not operate when ink near-end occurs. See P.1-12 “Changing an ink cartridge” to solve the ink near-end.
- Depending on the state of the heads, etc., the image quality deterioration may not be improved even with this function performed.In this case, contact our service office or the distributor in your region.

Setting the WIPING

When the set number of times scanning is performed has been reached during a printing operation, a wiping operation is performed automatically to prevent ink dew condensation on the nozzle face.

if you set the amount of ink to put more (high density, two coats, etc.), splash, ink drops or nozzle missing may occur.
It is recommended to set the periodical wiping to maintain the comfortable drawing status at any time.

1 **Press the (FUNCTION) key in LOCAL.**

2 **Press the (ENTER) key.**

3 **Press (▲)(▼) to select one of the types (1 to 4) and press the (ENTER) key.**

4 **Press (▲)(▼) to select [Print.CLEANING].**

5 **Press the (ENTER) key.**

6 **Press (▲)(▼) to select [WIPING].**

7 **Press the (ENTER) key.**

8 **Press the (ENTER) key.**

9 **Press (▲)(▼) to set the number of times scanning is performed.**

- Set value: 0 to 9,990 times
- The set value should be 30 to 50 times when the amount of ejected ink is large, for example, due to two coats of ink.

10 **Press the ENTER key.**

11 **Press the ▲ ▼ keys.**

• The set display of TEMP difference is displayed.

12 **Press the ENTER key.**

13 **Press ▲ ▼ to set temperature difference.**

14 **Press the ENTER key.**

15 **Press the END key several times to end the setting.**

Setting Media Detection

Set the method for detecting a media when the media is set and the detecting type when the media is cut.

1 **Press the FUNCTION key in LOCAL.**

```
FUNCTION
SETUP              <ENT>
```

2 **Press the ENTER key.**

```
SETUP
SELECT          :TYPE.1
```

3 **Press ▲ ▼ to select one of the types (1 to 4) and press the ENTER key.**

4 **Press ▲ ▼ to select [MEDIA DETECT].**

```
[1]
MEDIA DETECT    <ent>
```

5 **Press the ENTER key.**

```
[1]MEDIA DETECT
DETECT METHOD   <ent>
```

6 **Press the ENTER key.**

- The setting screen of media detection appears.

```
[1]MEDIA DETECT
DETECT METHOD:SELECT
```

7 **Press ▲ ▼ to select a set value.**

- **SELECT** : Select either a roll media or leaf media by pressing ◀ ▶ when the media is detected.
- **WIDTH** : The width of media is only detected without any key input when the media is detected. (Detecting is started automatically by lowering the clamp lever.)

8 **Press the ENTER key.**

```
[1]MEDIA DETECT
DETECT METHOD   <ent>
```

9 **Press ▼ to select [CUTTING DETECT].**

```
[1]MEDIA DETECT
CUTTING DETECT  <ent>
```

10 **Press the ENTER key.**

```
[1]MEDIA DETECT
DETECT     :BOTH EDGE
```

11 **Press ▲ ▼ to select a set value.**

- **Set Value** : BOTH EDGE / LEFT EDGE / RIGHT EDGE / NONE

12 **Press the ENTER key.**

13 **Press the END key several times to end the setting.**

Important!

- If the set value is set to others than "BOTH EDGE" in [CUTTING DETECT], although the cutting time is shortened, cutting remainders may happen due to the media skew.

Perform setting to reduce stripes between passes

In case that feeding stripes cannot be resolved even though media correction (☞ P.3-4) is performed, make “MAPS (Mimaki Advanced Pass System) valid. Feeding stripes become less visible by distributing the pass boundary.

- MAPS effect differs depending on the set value of the printing speed. Use it after checking effect in advance.
- When you speed up the printing speed, it takes shorter time to print. However, MAPS effect becomes weak.
- When you slow down the printing speed, it takes longer time to print. However, MAPS effect becomes strong and feeding stripes become less visible.
- The resolutions and passes for which MAPS is enabled are shown in the following table.
- For conditions when MAPS is disabled, the printer operates with MAPS-OFF and print speed settings disabled (±0%).
- MAPS may not be effective depending on image to be printed.
- Slight color change may be found.

Resolution (dpi)	Pass					
	4 colors			6 colors		
	△	○	◎	△	○	◎
540x360 *	1	2	4	2	4	8
540x720	2	4	8, 16	——	8	16, 32
540x1080	——	6	12, 24	——	12	24, 48
720x720	——	4	8, 16	——	8	16, 32
720x1080	——	6	12, 24	——	12	24, 48
720x1440	——	8	16, 32	——	16	32, 64

＊ : This printing mode can be used only when using sublimation transfer ink Sb53.
◎ : MAPS can be used when the print speed setting is within a range of ±50%, for both high speed and standard speed.
○ : At high speed, print speed is within the range of -50% to -1%. At standard speed, MAPS can be used when the print speed is within a range of ±50%.
△ : MAPS can be used when the print speed setting is within the range of -50% to -1% at standard speed only.

1 **Press the [FUNCTION] key in LOCAL.**

```
FUNCTION
SETUP                <ENT>
```

2 **Press the [ENTER] key.**

```
SETUP
SELECT          :TYPE.1
```

3 **Press the [ENTER] key.**

```
[1]
MEDIA COMP.      <ent>
```

4 **Press [▲][▼] to select [MAPS].**

```
[1]
MAPS             <ent>
```

5 **Press the [ENTER] key.**

```
[1]MAPS
SETUP            :OFF
```

6 **Press [▲][▼] to set ON/OFF.**

- Set Value : OFF, ON

```
[1]MAPS
SETUP            :ON
```

7 **Press the [ENTER] key.**

- When you select OFF, proceed to the Step 9.

```
[1]MAPS
PRINT SPEED      :  0%
```

8 **Press ▲ ▼ to change print speed.**

- **Set Value** : -50 ~ +50%
  (If +20% is entered, the print speed increases by approximately 20%. If -20% is entered, the print speed decreases by approximately 20%.)

9 **Press the ENTER key.**

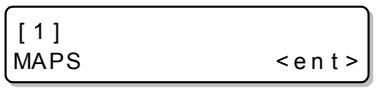

10 **Press the END key several times to end the setting.**

Other Settings

Change the settings according to the types of use.

1 **Press the FUNCTION key in LOCAL.**

2 **Press the ENTER key.**

3 **Press ▲ ▼ to select one of the types (1 to 4) and press the ENTER key.**

4 **Press ▲ ▼ to select an item for setting.**

- Select it, referring to P.3-2 “List of Functions”.

5 **Press the ENTER key.**

6 **Press ▲ ▼ to select the setting value.**

- Select it, referring to P.3-2 “List of Functions”.

7 **Press the ENTER key.**

8 **Press the END key several times to end the setting.**

Important!

- The set value is retained even when the power is turned "OFF".

Initializing the Settings

The already configured settings are initialized. (Resetting)
The set resetting can be executed per type.

1 **Press the FUNCTION key in LOCAL.**

```
FUNCTION
SETUP                <ENT>
```

2 **Press the ENTER key.**

```
SETUP
SELECT          :TYPE.1
```

3 **Press ▲ ▼ to select one of the types (1 to 4) and press the ENTER key.**

4 **Press ▲ ▼ to select [SETUP RESET].**

```
[1]
SETUP RESET      <ent>
```

5 **Press the ENTER key.**

```
[1]SETUP RESET
RESET            :ent
```

6 **Press the ENTER key.**

- The already configured settings are initialized.

7 **Press the END key several times to end the setting.**

Machine Settings

Common settings are functions for using this machine easily.
The following items can be set in Machine settings.

Item		Set value *1	Meaning
DRYNESS FEED		ON / OFF	It is set whether a media is fed for it to be dried after printing has been completed.
CONFIRM. FEED		ON / OFF	A feeding method for confirming the result of test printing can be set. When this is turned ON, the screen changes to "BACK FEED" for returning a media to the original position by pressing ENTER key.
TIME SET			The present date and time are set.
UNIT SETUP	TEMP.	°C (Centigrade) /°F (Fahrenheit)	A unit for displaying temperature is set.
	LENGTH	mm / inch	A unit for displaying length and area is set.
STAMP SETUP		ON / OFF	The setting for the output date and printing conditions to be output after printing has been completed is configured.
Waste Ink Warning		ON / OFF	It is set whether the confirmation message of the waste ink tank is displayed.(☞ P.3-33)
CART.PRIORITY *2		INK LEVEL EXP. DATE	Condition of the ink cartridge to be used first by the double-cartridge automatic switching function can be selected. (☞ P.3-33)
MACHINE NAME		01 ~ 99	The names of machines (machine No.) are set for recognizing them when they are connected to one another with a USB 2.0 interface used.
KEY BUZZER		ON / OFF	A buzzer sound when keys are pressed is set.
ENV. TEMP.		Not wait ARR. Wait arrival	Sets the operation when an error indicating that the ambient temperature is out of the usable temperature range occurs. (☞ P.3-33)

*1. The setting at the time of purchase is indicated with the underline.
*2. This setting is only available for 4-color set.

Setting the DRYNESS FEED

It is set whether a media is fed for it to be dried after printing has been completed.

When the same data will be printed several times, the dryness feed is performed differently depending on the specified method in the RasterLinkPro5.

- When “Number of printings” was set on the main screen of the RasterlinkPro5
  ⇒ When each printing is completed, the dryness feed is performed.
- When “Number of copies” was set in the job editor of the RasterLinkPro5
  ⇒ After the specified copies are printed, the dryness feed is performed.
  The media waste becomes less compared with when specifying in “Number of printings”.

1 **Press the [FUNCTION] key in LOCAL.**

```
FUNCTION
SETUP              <ENT>
```

2 **Press [▲][▼] to select [MACHINE SETUP].**

```
FUNCTION
MACHINE SETUP      <ENT>
```

3 **Press the [ENTER] key.**

```
MACHINE SETUP
DRY FAN            <ent>
```

4 **Press [▲][▼] to select [DRYNESS FEED].**

```
MACHINE SETUP
DRYNESS FEED       <ent>
```

5 **Press the [ENTER] key.**

```
DRYNESS FEED
SETUP               :ON
```

6 **Press [▲][▼] to select ON/OFF.**

7 **Press the [ENTER] key.**

8 **Press the [END] key several times to end the setting.**

Setting the CONFIRM. FEED

Set whether media feeding is performed for checking the result after test printing or not.

1 **Press the FUNCTION key in LOCAL.**

```
FUNCTION
SETUP                <ENT>
```

2 **Press ▲ ▼ to select [MACHINE SETUP].**

```
FUNCTION
MACHINE SETUP        <ENT>
```

3 **Press the ENTER key.**

```
MACHINE SETUP
DRY FAN              <ent>
```

4 **Press ▲ ▼ to select [CONFIRM. FEED].**

```
MACHINE SETUP
CONFIRM. FEED        <ent>
```

5 **Press the ENTER key.**

```
CONFIRM. FEED
FEED                 :OFF
```

6 **Press ▲ ▼ to select ON.**

- When selecting OFF, proceed to Step 9.

7 **Press the ENTER key to set [BACK FEED].**

```
CONFIRM.FEED
BACK FEED            :ON
```

8 **Press ▲ ▼ to select ON/OFF.**

- When the media return feeding is set "ON", the media fed by the confirmation feeding is slightly returned.
- If it is not desirable to return the media, set it to "OFF".

```
CONFIRMATION FEED
BACK FEED            :OFF
```

9 **Press the ENTER key.**

```
MACHINE SETUP
CONFIRM. FEED        <ent>
```

10 **Press the END key several times to end the setting.**

Setting the Time

1 **Press the FUNCTION key in LOCAL.**

2 **Press ▲ ▼ to select [MACHINE SETUP].**

3 **Press the ENTER key.**

4 **Press ▲ ▼ to select [TIME SET].**

5 **Press the ENTER key.**

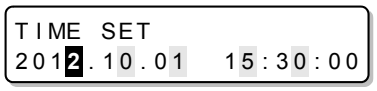

6 **Press ▲ ▼ ◀ ▶ to enter time.**

Year/Month/Day/Time selecting:by the ◀ ▶ keys.
Year/Month/Day/Time inputting:by the ▲ ▼ keys.

7 **Press the ENTER key.**

• The entered date is displayed.

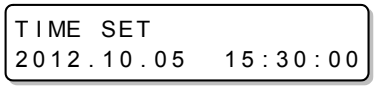

8 **Press the END key several times to end the setting.**

Important!

- The time set in the past can be changed until only eight hours before the present displayed time.
- When a future time after the present one has been set by mistake, performing the following operations in Step 7 enables the already set future time to be restored to the previously set time.
  (1) Press the FUNCTION key in Step 7. (The entered time and the previously set time are displayed.)
  (2) Press the ENTER key.
- If you have made several changes in time setting, only the last time to be set can be restored to the previously set time.In addition, the time before change is ahead by the time that has elapsed.

Setting the Units

Units used by this machine are set.

1 **Press the key (FUNCTION) in LOCAL.**

2 **Press (▲)(▼) to select [MACHINE SETUP].**

3 **Press the (ENTER) key.**

4 **Press (▲)(▼) to select [UNIT SETUP].**

5 **Press the (ENTER) key.**

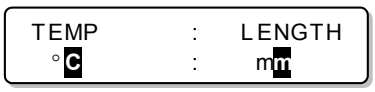

6 **Press (▲)(▼)(◀)(▶) to select a unit.**

Item selecting : by the (◀)(▶) keys
Unit setting : by the (▲)(▼) keys

7 **Press the (ENTER) key.**

8 **Press the (END) key several times to end the setting.**

Stamp Setting

It is set whether information, such as printing conditions and a printing date, is output after printing has been completed.

1 **Press the (FUNCTION) key in LOCAL.**

```
FUNCTION
SETUP                <ENT>
```

2 **Press (▲)(▼) to select [MACHINE SETUP].**

```
FUNCTION
MACHINE SETUP   <ENT>
```

3 **Press the (ENTER) key.**

```
MACHINE SETUP
DRY FAN              <ent>
```

4 **Press (▲)(▼) to select [STAMP SETUP].**

```
MACHINE SETUP
STAMP SETUP     <ent>
```

5 **Press the (ENTER) key.**

```
STAMP SETUP
STAMP                :OFF
```

6 **Press (▲)(▼) to select ON/OFF.**

7 **Press the (ENTER) key.**

8 **Press the (END) key several times to end the setting.**

Output Example

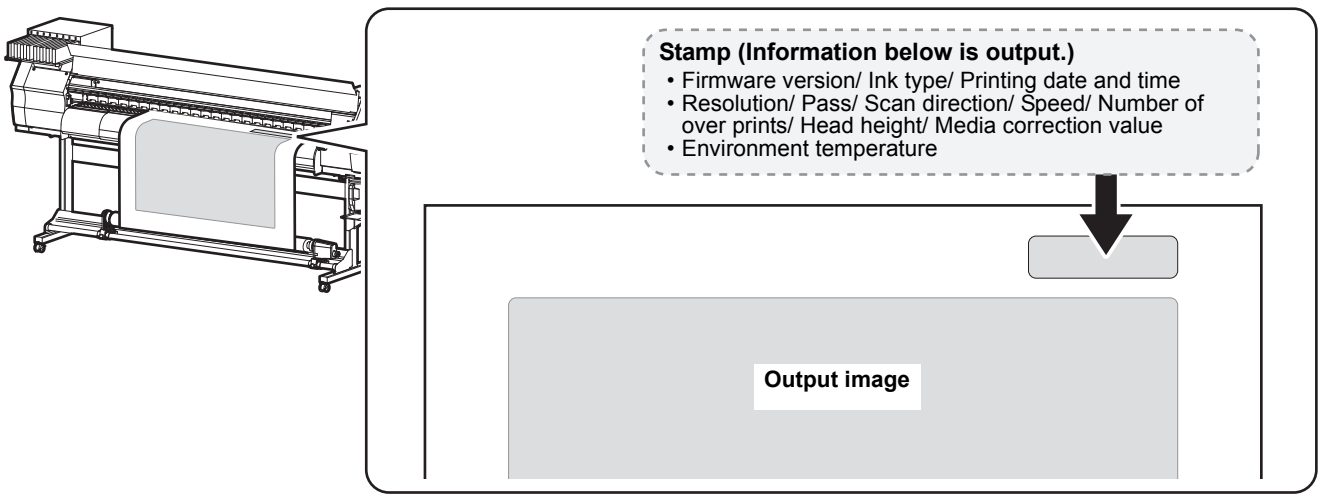

Setting the MACHINE NAME

The names of machines (machine No.) are set for recognizing them when they are connected to one another with a USB 2.0 interface used.

1 **Press the (FUNCTION) key in LOCAL.**

```
FUNCTION
SETUP              <ENT>
```

2 **Press (▲)(▼) to select [MACHINE SETUP].**

```
FUNCTION
MACHINE SETUP      <ENT>
```

3 **Press the (ENTER) key.**

```
MACHINE SETUP
DRY FAN            <ent>
```

4 **Press (▲)(▼) to select [MACHINE NAME].**

```
MACHINE SETUP
MACHINE NAME       <ent>
```

5 **Press the (ENTER) key.**

```
MACHINE NAME
        TS34-01    <ent>
```

6 **Press (▲)(▼) to select a machine name (01 to 99).**

```
MACHINE NAME
        TS34-10    <ent>
```

7 **Press the (ENTER) key.**

```
MACHINE SETUP
MACHINE NAME       <ent>
```

8 **Press the (END) key several times to end the setting.**

Setting a KEY BUZZER

A buzzer sound when keys are pressed is set.

1 **Press the (FUNCTION) key in LOCAL.**

```
FUNCTION
SETUP              <ENT>
```

2 **Press (▲)(▼) to select [MACHINE SETUP].**

```
FUNCTION
MACHINE SETUP      <ENT>
```

3 **Press the (ENTER) key.**

```
MACHINE SETUP
DRY FAN            <ent>
```

4 **Press (▲)(▼) to select [KEY BUZZER].**

```
MACHINE SETUP
KEY BUZZER         <ent>
```

5 **Press the (ENTER) key.**

```
KEY BUZZER
SETUP              :ON
```

6 **Press (▲)(▼) to select ON/OFF.**

```
KEY BUZZER
SETUP              :OFF
```

7 **Press the (ENTER) key.**

```
MACHINE SETUP
KEY BUZZER         <ent>
```

8 **Press the (END) key several times to end the setting.**

- When the key buzzer is set to "OFF", the buzzer sound for errors, warnings, operation completion, etc. cannot be shut off.

Change the operation condition of the ambient temperature

If you print in the status that the temperature of the place in which the machine has installed (ambient temperature) is out of the usable temperature range, ink discharging defect or changing color may occur, and it adversely affects the printing quality.
Here, select the operation if the ambient temperature is out of the usable temperature range when printing.

- For the details of the usable temperature range, refer to P.6-3 “Guaranteed temp.”.
- If the ambient temperature is out of the usable temperature range at the start of printing, the error message below is displayed to inform you of it.

**** ERROR 120 ****	**** ERROR 121 ****
ENVIRONMENT TEMP(LO)	ENVIRONMENT TEMP(HI)

1 **Press the FUNCTION key in LOCAL.**

```
FUNCTION
SETUP                <ENT>
```

2 **Press ▲ ▼ to select [MACHINE SETUP].**

```
FUNCTION
MACHINE SETUP        <ENT>
```

3 **Press the ENTER key.**

```
MACHINE SETUP
DRY FAN              <ent>
```

4 **Press ▲ ▼ to select [ENV.TEMP].**

```
MACHINE SETUP
ENV.TEMP.            <ent>
```

5 **Press the ENTER key.**

```
ENV.TEMP.
SEL     :Not wait ARR.
```

6 **Press ▲ ▼ to select a set value.**

Not wait ARR. : The error message is displayed for a moment, and printing starts.
Wait arrival : After the error message is displayed, wait until the ambient temperature reaches the proper value. Then, printing starts.

7 **Press the ENTER key.**

8 **Press the END key several times to end the setting.**

Extension of Ink Expiry Month

Ink expiry month can be extended for six months from the expired month. When used without extension, ink becomes unusable after two months of the expiry month.

Extension of Ink Expiry Month

The following setting or confirmation screen appears when the power of this machine is turned on, or when expired ink cartridge is set.

Important!

- An ink cartridge that is once set [YES] for extension cannot be changed the setting.
- To extend multiple inks' expiry month at a time, set the expired ink cartridges, and then set the extension.
- Extension of ink expiry month may lower the print image quality or print quality such as color difference or banding. Please understand them when extending ink expiry month.
- When initial filling, the ink expired more than two months ago cannot be used.

1 **When a screen shown on the right appears, go to the next step.**

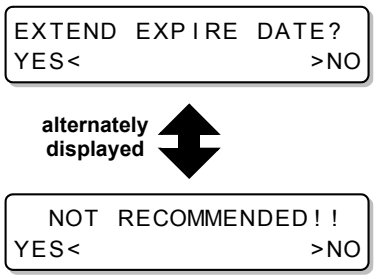

2 **Press the ◀ ▶ to select [YES].**

- When the ink expiry month is not extended, select [NO]. In this case, the ink will be disabled after two months of the expiry month.

3 **Press the ENTER key.**

- Ink expiry month is extended.

- When extended six months (six months from the ink expired month) have passed, a message "COMPLETELY EXPIRED" appears and the ink becomes unusable. Immediately replace the ink cartridge with a new one.
- If ink expiry month is extended, the cartridge LED blinks in green while supplying ink from the extended cartridge.

When a cartridge extended the expiry month is set

When a cartridge extended the expiry month is set and the power is turned on, or when a cartridge extended the expiry month is set to this machine, the following screen appears.

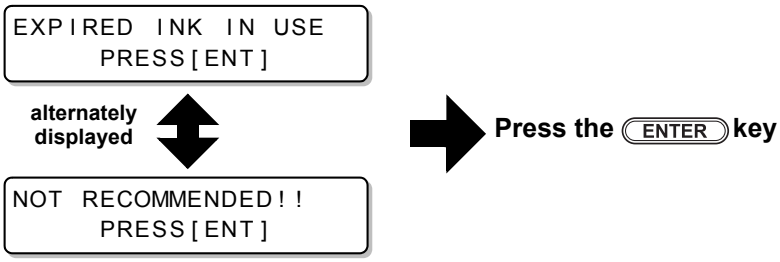

- To check expired ink, press the FUNCTION key while displaying the screens above alternately.

When an ink expiry month is extended

Example: If expiry month of your ink cartridge is February 2012.

- When the expiry month is not extended

February	March	April	May or later
Printable continuously		Not printable continuously	Not printable (Unusable)

A message "Expiration:2MONTH" or "COMPLETELY EXPIRED" appears on the display, and the cartridge lamp lights in red.

A message "Expiration:1MONTH" appears on the display, and the cartridge lamp blinks in red.

A message "Expiration" appears.

- When the expiry month is extended (When extended at the time of ▲)

February	March	April	May or later	September
Printable continuously		Not printable continuously	Printable continuously	Not printable (Unusable)

Printable continuously	Not printable continuously	Not printable (Unusable)	Printable continuously	Not printable (Unusable)

A message "COMPLETELY EXPIRED" appears.

Even if extended at any time from April to August, it is extended for six months from the expiry month

Switch Setting of Ink Supply Path

For the ink supply, condition of the ink cartridge to be used first by the double-cartridge automatic switching function can be selected.
This setting is only available for 4-color set.

Important!

- When expired ink cartridge is set, the expired cartridge is used first regardless of the setting below.
- When the optional bulk ink system (MBIS) is used and the MBIS is set in both slots, the setting below is effective.
- When both an ink cartridge and the bulk ink system (MBIS) are set in the supply paths of the same color, see the next page.

1 **Press the FUNCTION key in LOCAL.**

```
FUNCTION
SETUP              <ENT>
```

2 **Press ▲ ▼ to select [MACHINE SETUP].**

```
FUNCTION
MACHINE SETUP      <ENT>
```

3 **Press the ENTER key.**

```
MACHINE SETUP
DRY FAN            <ent>
```

4 **Press ▲ ▼ to select [CART.PRIORITY].**

```
MACHINE SETUP
CART.PRIORITY      <ent>
```

5 **Press the ENTER key.**

6 **Select the condition of ink to be used first by pressing the ▲ ▼ keys.**

```
CART.PRIORITY
SELECT      :INK LEVEL
```

INK LEVEL : Low ink cartridge is used first
EXP. DATE : Close-to-date ink cartridge is used first

7 **Press the ENTER key.**

8 **Press the END key several times to end the setting.**

When both ink cartridge and MBIS are used

When both an ink cartridge and the optional bulk ink system (MBIS) are set in the supply paths of the same color for 4-color ink set, you can select the ink to be used first.

- Usually, when both an ink cartridge and the bulk ink system (MBIS) are set in the supply path of the same color, the ink in the bulk ink system (MBIS) is used first.

Important!

- This setting is only available for 4-color set.
- If supply path does not have both ink cartridge and the bulk ink system (MBIS), this function cannot be set.
- Pull out the ink cartridge selected on this function or turn the power on again to disable the setting.

1 **Press the ENTER key in LOCAL or REMOTE.**

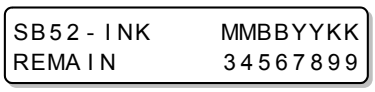

2 **Press the REMOTE key.**

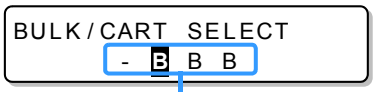

Displays the currently supplying ink.
B : Bulk ink system (MBIS)
C : Ink cartridge
- : Only one type is set

3 **Press the ▲ ▼ ◀ ▶ key to set the supply path and the ink to be used first.**

Select the supply path : Press the ◀ ▶ key.
Select the ink to be used first : Press the ▲ ▼ key.

4 **Press the ENTER key.**

- It enters in LOCAL or REMOTE.

Confirming Machine Information

The information of this machine can be confirmed.
The following items can be confirmed as machine information.

Item	Description
ERROR HISTORY	This displays the history of errors and warnings to date. When you press ▲▼, the date of occurrence (year/month/day/hour/minute) and the error/warning information are displayed alternately in the order of occurrence.
MAINTE. HISTORY	This displays the date and time when the maintenance function was used. The maintenance history mainly describes the manual and automatic (regular or sleep mode) cleaning functions.
PRT.modeHISTORY	This displays the information of online printing (printing conditions) that has been performed to date since the machine's power-on.(Up to 50 pieces of information) When you press ▲▼, the information is displayed in the order of printing.
LIST	This allows you to print the settings of this machine.
Ink REPL. Report	This prints ink history of this machine.
VERSION	This displays the version information of this machine.
Serial & Dealer No.	This displays serial and dealer numbers.

Displaying the Information

1 **Press the FUNCTION key in LOCAL.**

- When you want to print the list of settings of this machine, set a media. (☞ P.2-6)

2 **Press ▲▼ to select [INFORMATION].**

3 **Press the ENTER key.**

4 **Press ▲▼ to select a type of information.**

5 **Press the ENTER key.**

- The Information you need is displayed.
- When [List] is selected, the setting contents of the machine are printed.

About Displayed Information

This section describes how to read displayed information.

ERROR HISTORY

Displaying the occurrence date

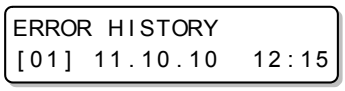

Displaying the contents of error

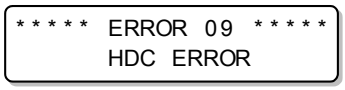

PRT.modeHISTORY

Displaying the resolution, the length printed or the like.

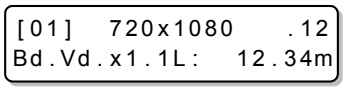

Displaying the date printed

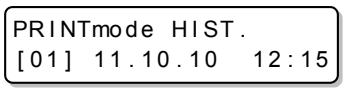

MAINTE. HISTORY

Displaying the contents of maintenance

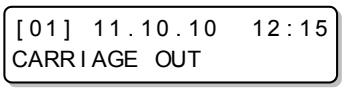

VERSION

Displaying the version information such as F/W or the like.

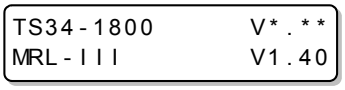

Serial & Dealer No.

Displaying Serial No./ Dealer No.

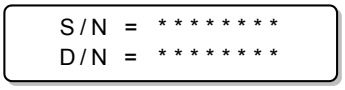

Chapter 4
Maintenance

This chapter

describes the items required to use this machine more comfortably, which are the methods for the daily care, the maintenance of the ink unit etc.

Maintenance 4-2
Precautions for Maintenance 4-2
About Cleaning Solution 4-2
Cleaning the Exterior Surfaces 4-3
Cleaning the Platen 4-3
Cleaning the Media Sensor 4-4
Cleaning the Media Holder 4-4
Maintaining the Capping Station 4-5
Cleaning the Wiper and Cap 4-5
Replacing the wiper 4-7
Washing of Head nozzle 4-8
Washing the Ink Discharge Passage (PUMP Tube Washing) 4-10
When the Machine Is Not Used for a Long Time (CUSTODY WASH) 4-12
Cleaning the Ink Head and the Area around It 4-14
When Nozzle Clogging Cannot Be Solved .4-16
FILL UP INK 4-16
DISCHARGE & WASH 4-17
Supplying the Machine with Ink Anew 4-19
Automatic Maintenance Function 4-20
Setting the Refreshing Intervals 4-20
Setting the Cleaning Intervals 4-21
Other Maintenance Functions 4-22
Changing the Time When a Warning about Wiper Replacement Is Issued 4-22
Setting the Head Selection 4-23
Setting the Display of Media Residual 4-24
If a Waste Ink Tank Confirmation Message Appears 4-26
To change the ink color 4-30
To use sublimation transfer ink with more stable quality 4-31
Set the interval to display the warning message (only when using sublimation dye ink) 4-32
Replacing the Cutter Blade 4-33

Maintenance

Maintain the machine regularly or as necessary so that its accuracy will be maintained and it can continue to be used for a long time.

Precautions for Maintenance

Pay attention to the following items when maintaining this machine.

	• When using cleaning solution for maintenance, be sure to wear the supplied protective glasses.
	• Never disassemble the machine.Disassembling it can result in electric shock hazards or damage to the machine. Before maintenance, be sure to turn off the power switch and unplug the power cable;otherwise, an unexpected accident may occur.
	• Prevent moisture from entering the machine.Moisture inside the machine can cause electric shock hazards or damage to the machine.
	• To ensure stable ink jetting, it is necessary for the machine to eject a small amount of ink (flushing) regularly when a printing (outputting) operation has not been performed for a long time. • When the machine is not to be used for a long time, turn off only the power switch on the front side, leave the main power switch at the rear turned ON (in the position of |), and leave the power cable connected.
	• Do not wipe the nozzle face of the heads, wiper, caps, etc. with water or alcohol.Doing so can cause nozzle clogging or machine failure. • Do not use benzene, thinner, or any chemical agent containing an abrasive.Such materials can deteriorate or deform the surface of the cover. • Do not apply a lubricant, etc. to any parts inside the machine. Doing so can cause printing failure. • Be careful that the cleaning solution, ink, etc. not to stick to the cover because this may cause the surface of the cover to deteriorate or deform.

About Cleaning Solution

Use the cleaning liquid dedicated for the ink being used.

Type of Ink	Applicable maintenance washings
Sublimation dye ink	Cleaning Liquid Bottle Kit A29 (SPC-0137) [Sold separately] aqueous Cleaning Liquid Cartridge (SPC-0259) [Sold separately]
Aqueous pigment ink	

Cleaning the Exterior Surfaces

When the exterior surfaces of the machine are stained, dampen a soft cloth with water or a neutral detergent diluted with water, squeeze it, and wipe the surfaces with the cloth.

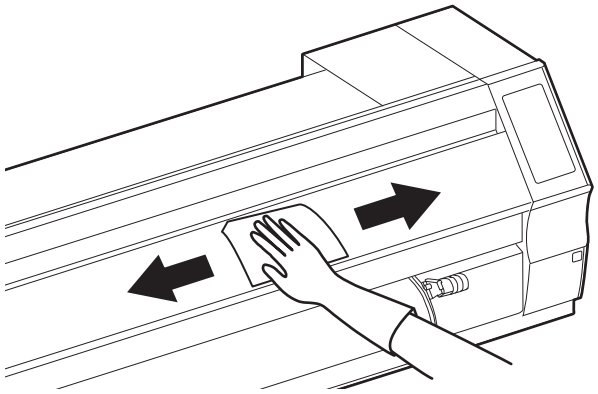

Cleaning the Platen

The platen easily gets dirty with lint, paper dust, etc. generated when a media is cut.
Wipe off conspicuous stains with a soft-hair brush, a dry cloth, a paper towel, etc.

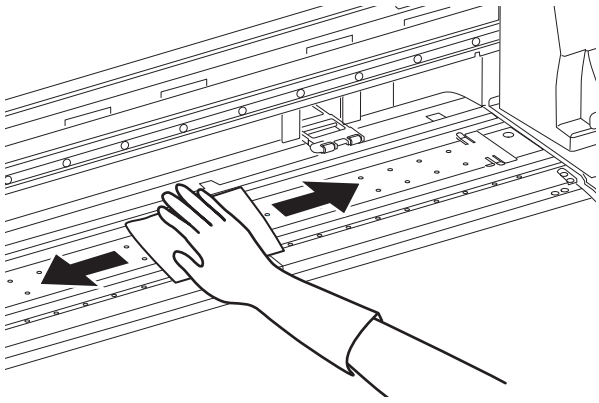

- When the platen is stained with ink, wipe it off with a paper towel containing a small amount of cleaning solution for maintenance.

Important!

- Before cleaning the platen, make sure that the platen has cooled adequately.
- Because dust and dirt are easily accumulated in the slots for holding a media and cutting paper (cutter line), be sure to clean these parts carefully.

Cleaning the Media Sensor

The media sensors are located on the platen in the backside and the bottom surface of the head. When the sensor is covered with dust, etc., it may cause false detection of media.
Using a cotton swab, remove the dust, etc. accumulated on the surface of the sensor.

When cleaning the sensor on the lower surface of the head is cleaned, move the carriage to the left end by the operations of step 1 of P.4-14 “Cleaning the Ink Head and the Area around It”, and then clean it.

The backside of the machine

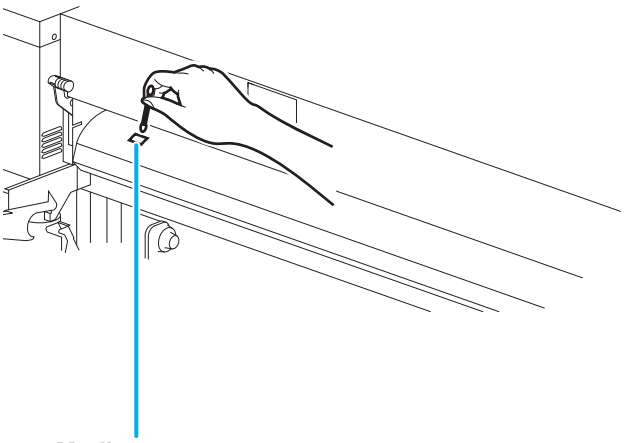

The lower surface of the head

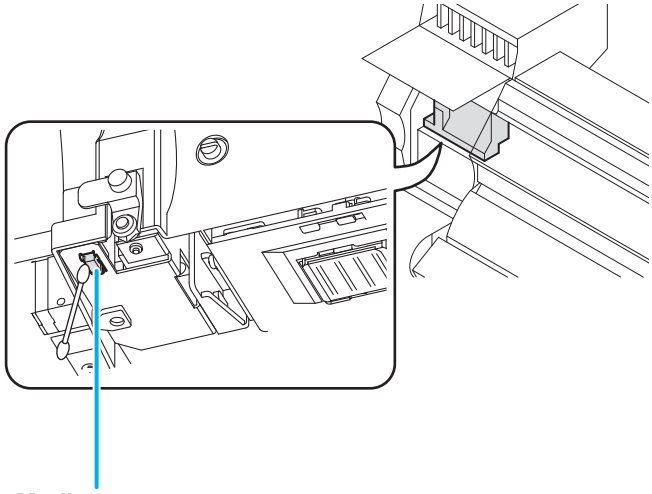

Cleaning the Media Holder

When the media holder is covered with lint, dust, etc., a media cannot be fed normally during printing or dust sticks to the nozzles, which may result in abnormal printing.
Clean the media holder regularly.

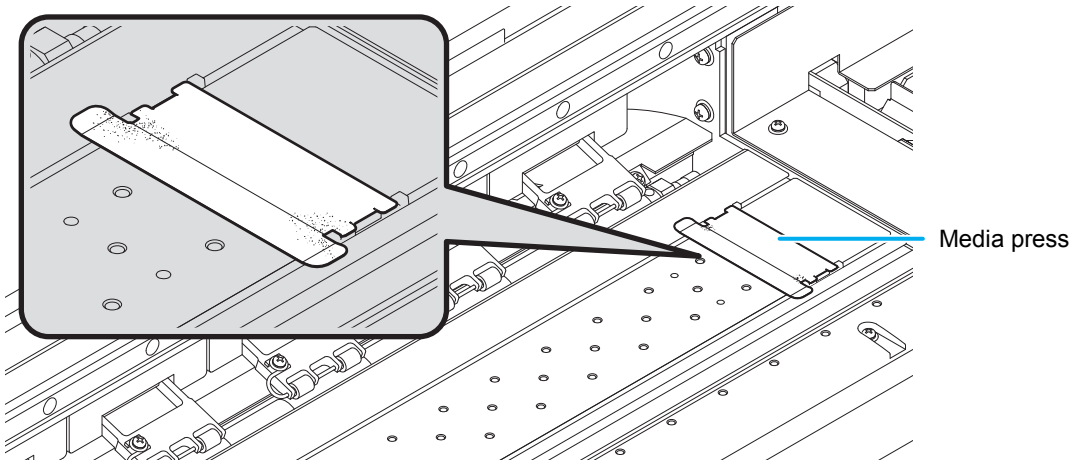

Maintaining the Capping Station

Maintain the ink cap, wiper, etc. located in the capping station. (ST.MAINTENANCE)

The ink cap and wiper function as follows.

- **Wiper** : It wipes off ink sticking to the head nozzles.
- **Ink cap** : It prevents the head nozzles from clogging due to dryness.

As the machine is used repeatedly, the wiper and ink cap gradually become dirty with ink, dust, etc.
If nozzle missing cannot be corrected even after head cleaning (☞ P.2-19) has been performed, use a cleaning kit and clean stick.

Tools required for Maintenance	Cleaning Liquid Bottle Kit A29 (SPC-0137)		
	• Clean stick (SPC-0527)	• Gloves	• Goggles

Caution

- Be sure to wear the supplied goggles and gloves when maintaining the capping station.Otherwise, you may get ink in your eyes.
- Do not move the carriage out of the capping station by hand.When it is desirable to move the carriage, press the ST.MAINTE key to execute the carriage-out. (☞ P.4-5Steps 1 to 2)

Cleaning the Wiper and Cap

It is recommended that the wiper and cap be cleaned frequently in order to maintain the high image quality of the machine and keep the machine itself in good working order.

Important!

- Replace the wiper with a new one when it is extremely dirty or bent.(☞ P.4-7)
- When cleaning the wiper, be careful that lint from the clean stick does not get left on the wiper.Remaining lint may cause image quality to deteriorate.

1 Press the ST.MAINTE key in LOCAL.

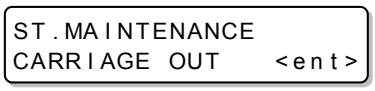

2 Press the ENTER key.

- The carriage moves onto the platen.

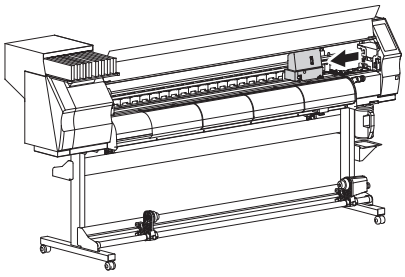

3 Open the front cover then remove the wiper.

- Pull out the wiper by holding the protrusions at its both ends.

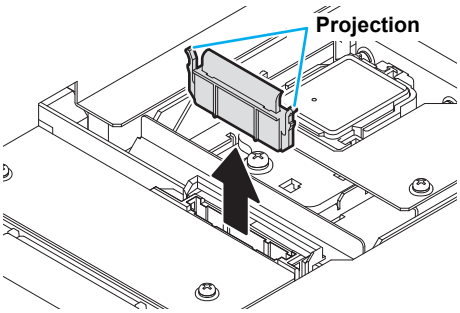

4 Clean the wiper and bracket.

• Wipe off the ink sticking to the wiper and bracket with a clean stick dipped in cleaning solution for maintenance.

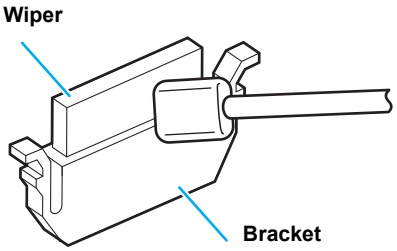

5 Clean the wiper slider.

• Wipe off the ink sticking to the wiper slider with a clean stick dipped in cleaning solution for maintenance.

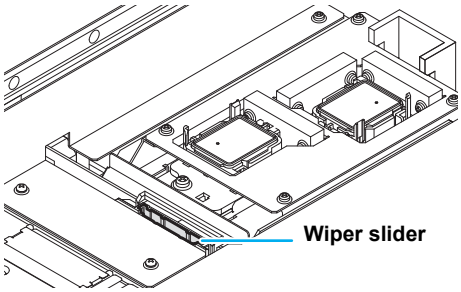

6 Set the wiper at the original position.

• Insert the wiper by holding both ends of the wiper.

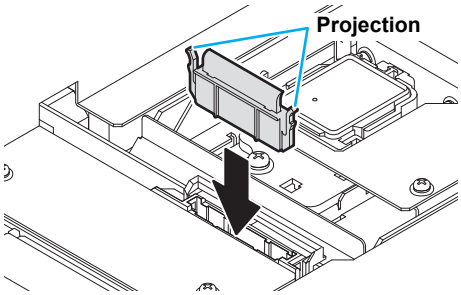

7 Clean the cap rubber and wiper cover.

• Wipe off the ink sticking to the cap rubber and wiper cover with a clean stick dipped in cleaning solution for maintenance.

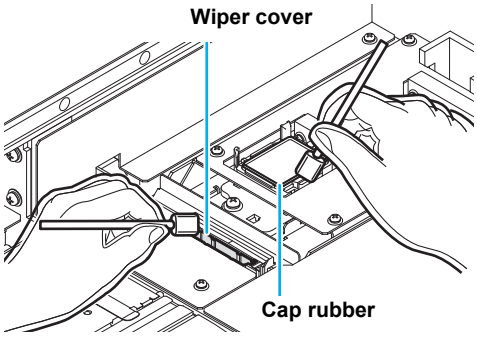

8 Close the front cover then press the ENTER key.

• After its initial operation, the machine returns to LOCAL.

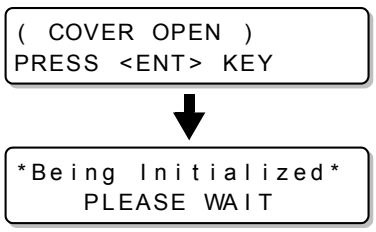

Performing the station maintenance without ST.MAINTE key

You can select station maintenance by using the FUNCTION key in the Local without pressing the ST.MAINTE key.

Press the FUNCTION key in Local. → **Press ▲ ▼ to select [MAINTENANCE].** → **Press the ENTER key twice.**
• It becomes the same condition as the ST.MAINTE key is pressed from Local.

Replacing the wiper

The wiper is consumable. When the display indicates that it is necessary to replace the wiper, immediately replace the wiper with a new one.
Also, wipe ink sticking to the lower surface of the slider off.

<LOCAL.1> [#01]
!Replace a WIPER

Important!
- A cleaning wiper is an option.Buy one through the dealer in your region or at our service office.
- Do not select [WIPER REPLACE] at any time other than when the wiper is replaced.Once it is selected, the counter that counts the number of times the wiper is used is reset.

1 Press the ST.MAINTE key in LOCAL.

ST.MAINTENANCE
CARRIAGE OUT <ent>

2 Press ▲ ▼ to select [WIPER REPLACE].

ST.MAINTENANCE
WIPER EXCHANGE <ent>

3 Press the ENTER key.

- The carriage moves onto the platen.

ST.MAINTENANCE
COMPLETED :ent

Important!
- Until the replacement work is completed, [COMPLETED: ent] is displayed on the screen. After the work up to the Step 5 is completed and you close the front cover, press the ENTER key. If you press the ENTER key before the replacement work is completed, the carriage returns to the original position.

4 Open the front cover then remove the wiper.

- Pull out the wiper by holding the protrusions at its both ends.

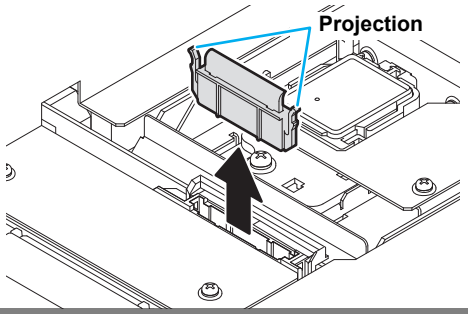

5 Insert a new wiper.

- Insert a new wiper by holding its both ends.

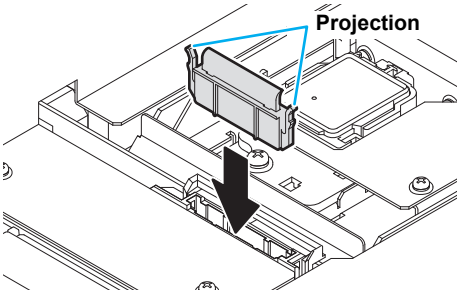

6 Close the front cover then press the ENTER key.

- After its initial operation, the machine returns to LOCAL.

(COVER OPEN)
PRESS <ENT> KEY

Being Initialized
PLEASE WAIT

Washing of Head nozzle

Perform cleaning of the nozzles in the heads to prevent them being clogged with coagulated ink.

Check the items on the right beforehand.	**Is [NEAR END] or [INK END] displayed?** • The cleaning solution or ink is absorbed when the nozzles are washed. At this time, if the state of "no ink" or "almost no ink" is detected, the nozzle washing operation cannot start. • Replace the cartridge with another from which the state of "almost no ink" or "no ink" is not detected.

1 **Press the ST.MAINTE key in LOCAL.**

```
ST.MAINTENANCE
CARRIAGE OUT    <ent>
```

2 **Press ▲ ▼ to select [NOZZLE WASH].**

```
ST.MAINTENANCE
NOZZLE WASH     <ent>
```

3 **Press the ENTER key.**

• The carriage moves onto the platen.

```
WIPER CLEANING
COMPLETED(NEXT) :ent
```

Important! • Until wiper cleaning is competed, [COMPLETED (NEXT): ent] is displayed on the screen. After the work up to the step 4 is completed, press the ENTER key. If you press the ENTER key before cleaning is completed, the machine moves to the next washing procedure.

4 **Clean the wiper and the bracket.**

(1) Open the front cover then pull out it by holding projections at both ends of the wiper.
(2) Clean the wiper and bracket with a clean stick dipped in cleaning solution (SPC-0137) for maintenance.
(3) Insert it in the original position by holding the projections at both ends of the wiper.

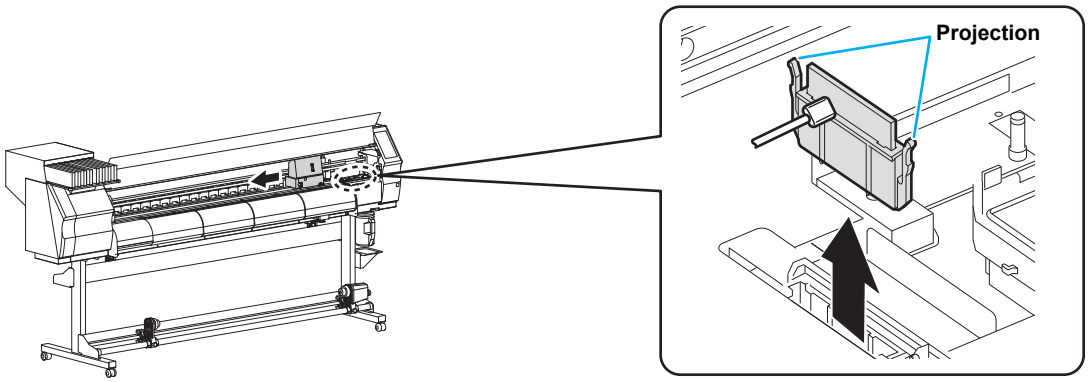

5 **Press the ENTER key.**

```
Fill the liquid
COMPLETED(NEXT) :ent
```

Important! • Until washing liquid is filled, [COMPLETED (NEXT): ent] is displayed on the screen. After the work up to the Step 6 is completed and you close the front cover, press the ENTER key. If you press the ENTER key before washing liquid is filled, the carriage returns to the original position.

6 Fill up the cap with cleaning solution for maintenance, using a dropper.

- Fill up the cap with cleaning solution on the verge of overflow from the cap.

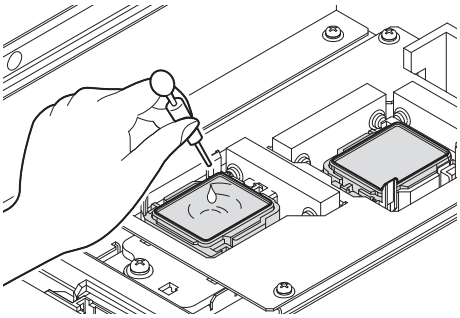

7 Close the front cover then press the ENTER key.

```
ST.MAINTENANCE
LEAVING TIME   : 1min
```

8 Press ▲ ▼ to set the time for the cleaning solution to be left as it is.

- **Set value** : 1 to 99 minutes (Unit: minute)

```
ST.MAINTENANCE
LEAVING TIME   : 2min
```

9 Press the ENTER key.

- The cleaning solution filled in the cap is absorbed.
- The screen on the right is displayed only for the duration set in the step 8.
- It returns to the Local after the duration.

```
*Being Initialized*
    PLEASE WAIT
```

↓

```
<LOCAL.1>
```

Important!

- When nozzle missing is not cleared even after this washing is carried out several times, execute " When Nozzle Clogging Cannot Be Solved" (☞ P.4-16) and "DISCHARGE & WASH" (☞ P.4-17) . When the problem is not solved even after the operation above, contact the distributor in your region or our service office.
- When this machine is not filled with cleaning solution for maintenance, do the following:
  (1) Perform the operations in Steps 1 to 5.
  (2) Fill up the cap with cleaning solution for maintenance, using a syringe.
  (3) Perform the operations in Step 7 and later.

Washing the Ink Discharge Passage (PUMP Tube Washing)

Wash the ink discharge passage regularly to prevent the head nozzles from clogging due to ink coagulation inside the passage.

- When the following messages are indicated, check the waste ink tank, and then operate it, referring to P.4-26 “If a Waste Ink Tank Confirmation Message Appears” according to the situation.

Confirm a waste tank Continue< >Exchange	Confirm a waste tank Exchange :ent

1 **Press the ST.MAINTE key in LOCAL.**

ST.MAINTENANCE
CARRIAGE OUT <ent>

2 **Press ▲ ▼ to select [PUMP TUBE WASH].**

ST.MAINTENANCE
PUMP TUBE WASH <ent>

3 **Press the ENTER key.**

- The carriage moves onto the platen.
- Dry suction operation is performed repeatedly until the washing work is completed.

ST.MAINTENANCE
COMPLETED :ent

4 **Open the front cover.**

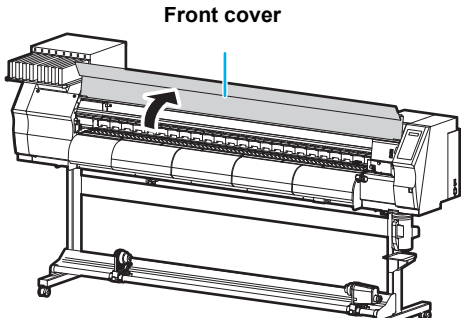

5 **Fill up the cap with cleaning solution for maintenance, using a dropper.**

- While dry suction stops, fill up the cap with cleaning solution on the verge of overflow from the cap.

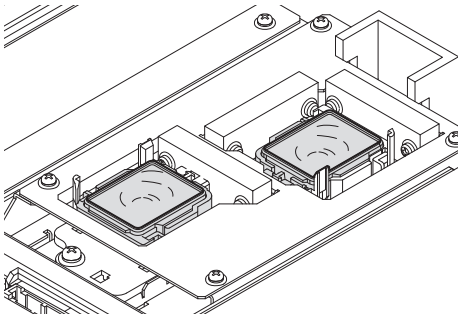

6 **Close the front cover and press the ENTER key.**

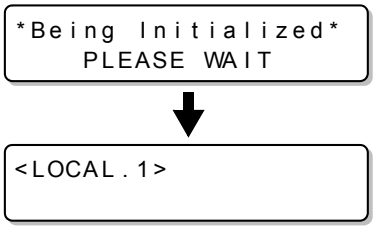

• After the idle absorbing operation has been performed for 30 seconds, the screen returns to LOCAL.

Important!

• Perform the followings unless the cleaning solution has been filled in the machine.
(1) Perform the operations until the step 4.
(2) Fill the cap with the cleaning solution by using a syringe.
(3) Perform the operations from the step 6.

When the Machine Is Not Used for a Long Time (CUSTODY WASH)

When the machine is not going to be used for a week or more, use the cleaning function for custody to clean the head nozzles and ink discharge passage.After this, keep the machine in custody.

Check the items on the right beforehand.	**Is [NEAR END] or [INK END] displayed?** • The cleaning solution or ink is absorbed when the nozzles are washed. At this time, if the state of "no ink" or "almost no ink" is detected, the nozzle washing operation cannot start. • Replace the cartridge with another from which the state of "almost no ink" or "no ink" is not detected.

• When the following messages are indicated, check the waste ink tank, and then operate it, referring to P.4-26 “If a Waste Ink Tank Confirmation Message Appears” according to the situation.

Confirm a waste tank Continue< >Exchange	Confirm a waste tank Exchange :ent

1 Press the ST.MAINTE key in LOCAL.

ST.MAINTENANCE
CARRIAGE OUT <ent>

2 Press ▲ ▼ to select [CUSTODY WASH].

ST.MAINTENANCE
CUSTODY WASH <ent>

3 Press the ENTER key.

• The carriage moves onto the platen.

WIPER CLEANING
COMPLETED(NEXT) :ent

Important!

• Until wiper/ bracket cleaning is competed, [COMPLETED (NEXT): ent] is displayed on the screen. After the work up to the step 4 is completed, press the ENTER key. If you press the ENTER key before cleaning is completed, the machine moves to the next washing procedure.

4 Clean the wiper and the bracket.

(1) Open the front cover then pull out it by holding projections at both ends of the wiper.
(2) Clean the wiper and bracket with a clean stick dipped in cleaning solution (SPC-0137) for maintenance.
(3) Insert it in the original position by holding the projections at both ends of the wiper.

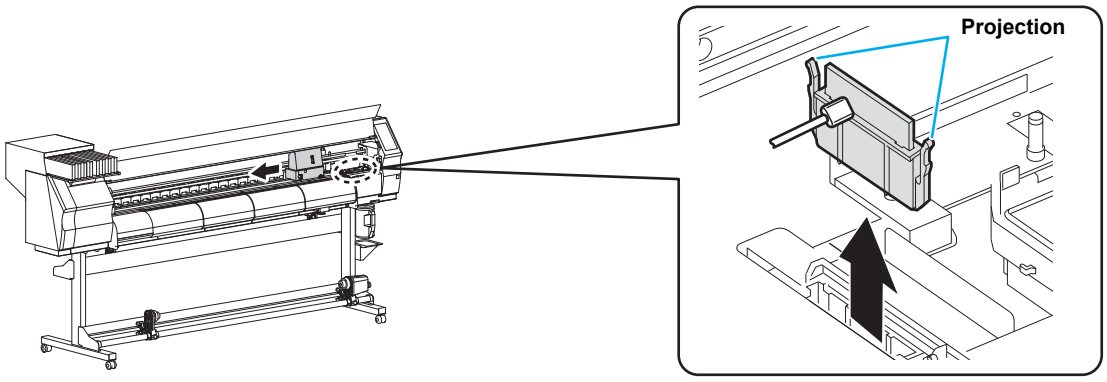

5 **Press the ENTER key.**

```
Fill the liquid
COMPLETED(NEXT) :ent
```

Important!

- Until washing liquid is filled, [COMPLETED (NEXT): ent] is displayed on the screen. After the work up to the Step 6 is completed and you close the front cover, press the ENTER key. If you press the ENTER key before washing liquid is filled, the carriage returns to the original position.

6 **Fill up the cap with cleaning solution for maintenance, using a dropper.**

- Fill the cap with the cleaning solution just before the solution overflows from the cap.

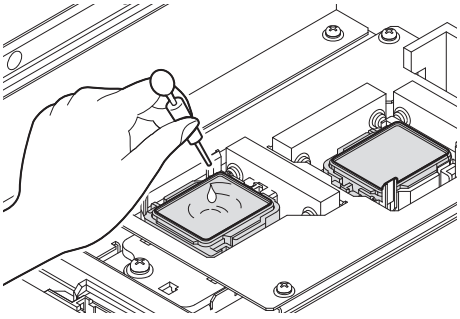

7 **Close the front cover and press the ENTER key.**

```
ST.MAINTENANCE
LEAVING TIME  : 1min
```

8 **Press ▲ ▼ to set the time for the cleaning solution to be left as it is.**

```
ST.MAINTENANCE
LEAVING TIME  : 2min
```

- **Set Value** : 1 to 99 min (by the unit of 1 min)

9 **Press the ENTER key.**

```
*Being Initialized*
   PLEASE WAIT
```

- The nozzles are washed.
- When the nozzles have been completely washed, the head moves onto the platen.

10 **Open the front cover.**

11 **Fill up the cap with cleaning solution for maintenance, using a syringe.**

- Fill the cap with the cleaning solution just before the solution overflows from the cap.

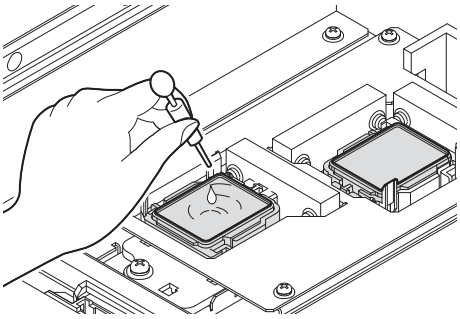

12 **Close the front cover and press the ENTER key.**

```
*Being Initialized*
   PLEASE WAIT
```

- After its initial operation, the machine returns to LOCAL.

Cleaning the Ink Head and the Area around It

Because the ink head employs a very precise mechanism, due care needs to be taken when it is cleaned. Using a clean stick, etc., rub off gelatinous ink or dust that may stick to the lower part of the slider and the area around the ink head.In doing so, never rub the nozzles of the head.

Tools required for cleaning	• Clean stick (SPC-0527)	• Gloves	• Goggles

Caution

- Be sure to wear the attached goggles and gloves when cleaning the area around the ink head.Otherwise, you may get ink in your eyes.
- The ink contains organic solvent.If you get the ink on your skin or in your eyes, wash it away with plenty of water immediately.

1 Select [CR.MAINTENANCE] of the maintenance menu.

(1) Press the FUNCTION key in LOCAL.
(2) Press ▲ ▼ to select [MAINTENANCE] and press the ENTER key.
(3) Press ▲ ▼ to select [CR.MAINTENANCE] and press the ENTER key.
(4) Press the ENTER key.
- Carriage will move to the left end of this device.

2 Remove the maintenance cover.

(1) Turn four screws that fix the maintenance cover to the left, and remove them.
(2) Remove the maintenance cover.

• If the maintenance cover is hard to remove, use the supplied screwdriver.

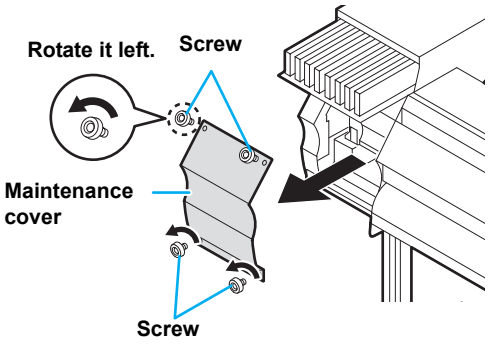

3 Wipe ink sticking to the side of the head off with a clean stick.

• Never rub the nozzles.

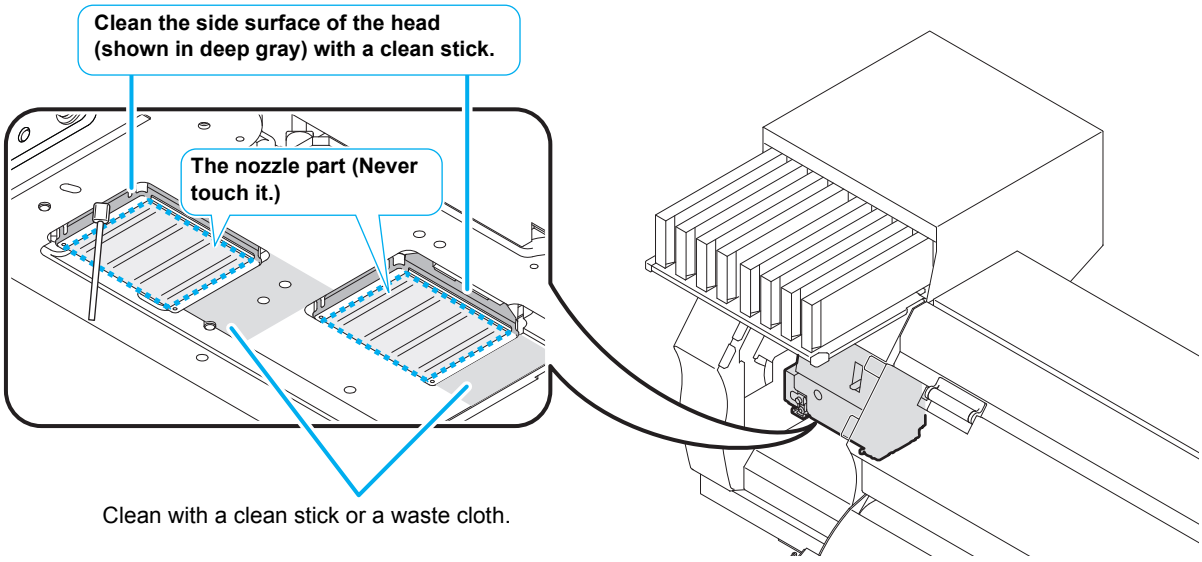

4 Press the ENTER key after the cleaning.

Close a cover

5 **Close the maintenance cover then press the ENTER key.**

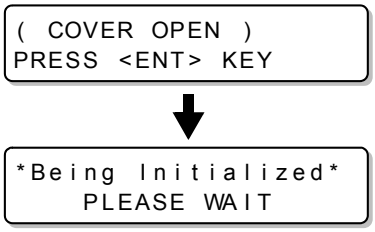

• After its initial operation, the machine returns to LOCAL.

When Nozzle Clogging Cannot Be Solved

When nozzle clogging cannot be solved even after the ink head cleaning (☞ P.2-19) or head nozzle washing (☞ P.4-8) has been done, perform the following two functions:

FILL UP INK	• Supplies ink to correct nozzle clogging.
NOZZLE WASH	• Wash the head nozzle. (☞ P.4-8)

FILL UP INK

1 **Select [HD.MAINTENANCE] of the maintenance menu.**

(1) Press the FUNCTION key in LOCAL.
(2) Press ▲ ▼ to select [MAINTENANCE] and press the ENTER key.
(3) Press ▲ ▼ to select [HD. MAINTENANCE].
(4) Press the ENTER key.

2 **Press the ENTER key.**

• Ink is supplied automatically.

• When ink has been supplied completely, the screen returns to the shown on the right.

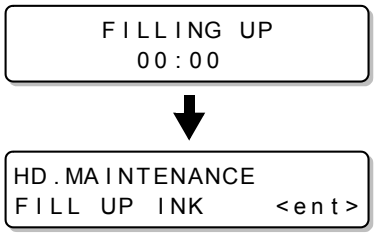

3 **Press the END key several times to end the setting.**

DISCHARGE & WASH

Ink is discharged from the head, damper, and tube for them to be cleaned.

Important!

- To use this function, the dedicated cleaning solution (☞ P.4-2 “About Cleaning Solution”) is required. In addition, before performing the work, check whether ink to be filled again remains or not.
- When the following messages are indicated, check the waste ink tank, and then operate it, referring to P.4-26 “If a Waste Ink Tank Confirmation Message Appears” according to the situation.

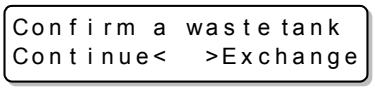

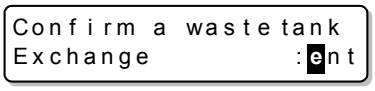

1 Select [HD.MAINTENANCE] of the maintenance menu.

(1) Press the FUNCTION key in LOCAL.
(2) Press ▲ ▼ to select [MAINTENANCE] and press the ENTER key.
(3) Press ▲ ▼ to select [HD. MAINTENANCE].
(4) Press the ENTER key.

2 Press ▲ ▼ to select [DISCHARGE & WASH].

3 Press the ENTER key.

4 Remove the ink cartridge.

- Ink remaining in the head or tube is discharged into the waste ink tank.
- When the cleaning solution has been discharged completely, the screen on the right appears.

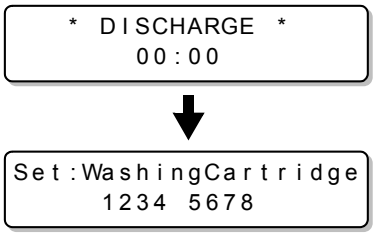

5 Set the cleaning solution cartridge to the ink station.

- The cleaning solution starts to be absorbed.
- When the cleaning solution has been absorbed completely, the screen on the right appears.

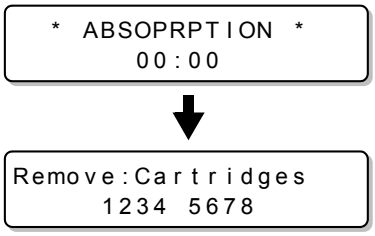

6 Remove the cleaning solution cartridge.

- The cleaning solution remaining in the head or tube is discharged into the waste ink tank.
- When the cleaning solution has been discharged completely, the screen on the right appears.

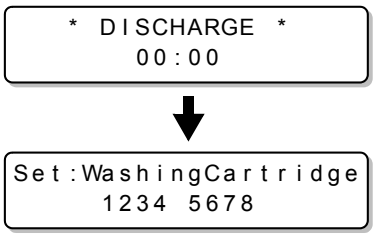

7 Set the cleaning solution cartridge to the ink station.

- The cleaning solution starts to be absorbed.
- When the cleaning solution has been absorbed completely, the screen on the right appears.

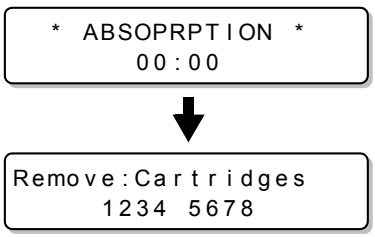

8 Remove the cleaning solution cartridge.

- The cleaning solution remaining in the head or tube is discharged into the waste ink tank.
- When the cleaning solution has been discharged completely, the screen on the right appears.

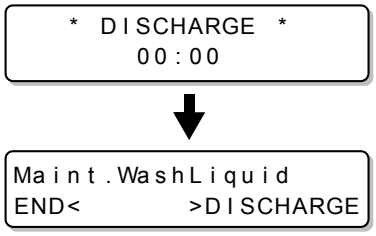

- Check the state of the waste ink tank and select whether to stop or resume cleaning.
- When you resume cleaning, press ▶ to return to Step 5.

9 Press the ◀ key.

10 Press the END key several times to end the setting.

Supplying the Machine with Ink Anew

Important! • If an ink cartridge extended the expiry month (☞ P.3-34) is set, initial ink fill cannot be performed. Replace the ink cartridge with another one (neither extended nor expired) and perform the initial fill.

1 **Turn the power of the machine on.**

• When the power is turned on, the firmware version is displayed following [BOOT].

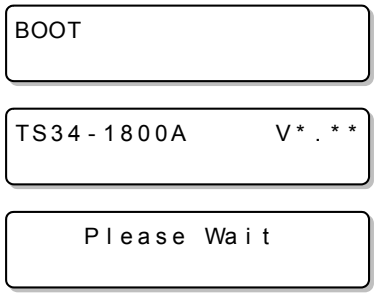

2 **Press the ▲ ▼ key to select the ink type to fill.**

• To check the state of the cartridge, press the REMOTE key. (☞ P.5-5)

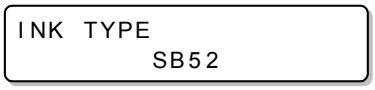

3 **Press the ▲ ▼ key to select the ink set (the color) to fill.**

• You cannot change the current ink set to another by yourself.
• If you want to change the ink set, contact our service office.

4 **Press the ENTER key.**

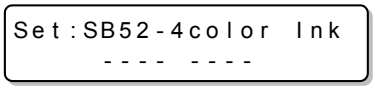

5 **Set an ink cartridge to the ink station.**

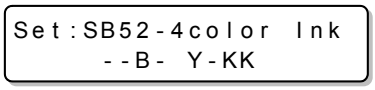

• When an ink cartridge has been set, the machine is supplied with ink automatically.
• The ink station has an insertion slot allocated to each ink color.Set the ink cartridge according to the cartridge label under the ink station.

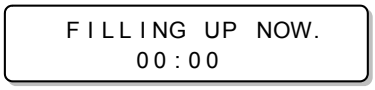

• The setting orders of ink cartridges differ depending on the ink set you use. For details, refer to P.6-4 “Setting orders of ink cartridges”.

6 **When ink has been supplied to the machine completely, the screen returns to LOCAL.**

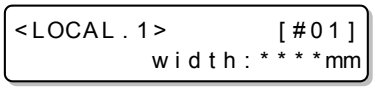

• If blurring or missing of characters is found in printing after the machine has been supplied with ink anew, see "Performing Head Cleaning" (☞ P.2-19) or "FILL UP INK" (☞ P.4-16).

When the Machine Cannot Be Supplied with Ink in Step 5

When various ink errors including "Almost no ink" and "No ink" occur, ink does not start to be supplied to the machine.

When ink does not start to be supplied to the machine in "Supplying the Machine with Ink Anew" Step 5:

(1) Press the END key to return to the screen in Step 2.
(2) Press the REMOTE key to check the state of the ink cartridge.
(3) Correct ink errors (☞ P.5-5) and repeat the operations from Step 2.

Automatic Maintenance Function

To use this machine comfortably, you can set various maintenances to be performed automatically.
Here, set performing intervals of various automatic maintenances.
You can prevent troubles such as ink clogging by performing automatic maintenance periodically (automatic maintenance function).
For the auto maintenance functions, the following items can be set:

Important!
- The maintenance intervals (default value) differ depending on the ink type you use. For details, refer to P.6-4 “Maintenance intervals of automatic maintenance function”.
- When you perform maintenance manually, after manual maintenance is completed and when time set with the automatic maintenance function has passed, maintenance starts automatically.

Function name	Descriptions
REFRESH	The interval between each refreshing operation is set.
CLEANING	The interval between each cleaning operation is set.

Important!
- During the right message is displayed, the operation set in the auto maintenance function is not carried out. Perform the operations of P.4-27 if required.
- When the power switch on the front of the machine is turned off, check the waste ink tank.

<LOCAL.1> [#01]
!WASTE TANK

Setting the Refreshing Intervals

The interval between each operation of ejecting a small amount of ink from the nozzles to prevent nozzle clogging is set.

1 **Select [AUTO MAINT.] of the maintenance menu.**

(1) Press the FUNCTION key in LOCAL.
(2) Press ▲ ▼ to select [MAINTENANCE] and press the ENTER key.
(3) Press ▲ ▼ to select [AUTO MAINT.].

2 **Press the ENTER key.**

AUTO MAINT.
REFRESH <ent>

3 **Press the ENTER key.**

AUTO MAINT.
REFRESH interval= 1h

4 **Press ▲ ▼ to set the refreshing interval.**

- **Set value** : OFF or 1 to 168 hours

AUTO MAINT.
REFRESH interval= 10h

5 **Press the ENTER key.**

AUTO MAINT.
REFRESH <ent>

6 **Press the END key several times to end the setting.**

Setting the Cleaning Intervals

This is a function operated instead of the PUMP tube washing when the cleaning solution for maintenance has been used up.
The cleaning type and the interval between each cleaning operation are set.

1 **Select [AUTO MAINT.] of the maintenance menu.**

(1) Press the FUNCTION key in LOCAL.
(2) Press ▲ ▼ to select [MAINTENANCE] and press the ENTER key.
(3) Press ▲ ▼ to select [AUTO MAINT.].
(4) Press the ENTER key.

2 **Press ▲ ▼ to select [CLEANING].**

```
AUTO MAINT.
CLEANING          <ent>
```

3 **Press the ENTER key.**

```
AUTO MAINT.
CLEAN.INTERVAL =   1h
```

4 **Press ▲ ▼ to set the interval between each cleaning operation.**

• **Set value** : OFF or 1 to 168 hours

```
AUTO MAINT.
CLEAN.INTERVAL =   4h
```

5 **Press the ENTER key.**

• The cleaning type selection screen appears.

```
AUTO MAINT.
CLEAN.TYPE     :NORMAL
```

6 **Press ▲ ▼ to select a cleaning type.**

• **Set value** : NORMAL, SOFT, HARD

```
AUTO MAINT.
CLEAN.TYPE     :SOFT
```

7 **Press the ENTER key.**

```
AUTO MAINT.
CLEAN.INTERVAL =   4h
```

8 **Press the END key several times to end the setting.**

Changing the Time When a Warning about Wiper Replacement Is Issued

The wiper is consumable.The head can easily become dirty in a dusty environment.
In addition, the head cannot be cleaned adequately with a bent or worn wiper used.Wiper levels can be set so that a warning about wiper replacement is issued earlier than the standard according to the operating environment.

Normal wiper

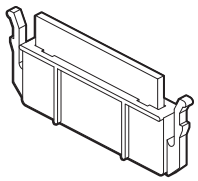

Deformed wiper

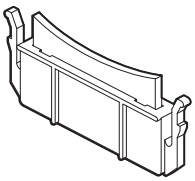

10/10	Displays the wiper replacement warning when wiping has been performed the standard number of times. (Initial value)
9/10	Displays the wiper replacement warning when wiping has been performed nine tenths of the standard number of times.
8/10	Displays the wiper replacement warning when wiping has been performed eight tenths of the standard number of times.
⋮	
1/10	Displays the wiper replacement warning when wiping has been performed one tenth of the standard number of times.

1 **Select [WIPER LEVEL] of the maintenance menu.**

(1) Press the FUNCTION key in LOCAL.
(2) Press ▲ ▼ to select [MAINTENANCE] and press the ENTER key.
(3) Press ▲ ▼ to select [WIPER LEVEL].

2 **Press the ENTER key.**

```
WIPER LEVEL
LEVEL          :10/10
```

3 **Press ▲ ▼ to set a wiper level.**

- **Set value**: 1/10 to 10/10

```
WIPER LEVEL
LEVEL          : 9/10
```

4 **Press the ENTER key.**

```
MAINTENANCE
WIPER LEVEL    <ent>
```

5 **Press the END key several times to end the setting.**

Setting the Head Selection

You can select the head to use for printing.
When one head cannot be used because nozzle clogging has not been solved etc., you can set that the head with nozzle clogging will not be used.

Important!

- The scope of head selection is from printing (including test printing) to flushing. Filling function etc. targets all heads.
- When you print with only one head, the printing speed is dimidiated compared with when printing with two heads.

1 Select [HEAD SELECT] of the maintenance menu.

(1) Press the FUNCTION key in LOCAL.
(2) Press ▲ ▼ to select [MAINTENANCE] and press the ENTER key.
(3) Press ▲ ▼ to select [HEAD SELECT].

2 Press the ENTER key.

```
HEAD SELECT
SELECT              :12
```

3 Press ▲ ▼ to select a head to use.

```
HEAD SELECT
SELECT              :1_
```

• **Set Value** : 12 (Use both heads.)
1_ (Use Head 1 only.)
_2 (Use Head 2 only.)

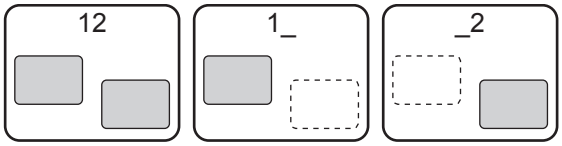

4 Press the ENTER key.

```
MAINTENANCE
HEAD SELECT         <ent>
```

5 Press the END key several times to end the setting.

Setting the Display of Media Residual

Whether the screen displays the remaining amount of a media is set.

When the media remaining amount display is turned to "ON"	the remaining amount of a media is displayed in Remote. (However, when a leaf media is used, the length of the media to be printed is displayed.)
When the media remaining amount display is turned to "OFF"	the remaining amount of a media is not displayed in the Remote.

- The amount of a media that has been fed by the printing and jog keys is reflected in the remaining amount of a media.
- The length of a media (initial value of the remaining amount) is entered when a roll media is detected.(☞ P.2-12)
- The setting configured here does not become effective unless media detection is performed after the setting has been complete.

1 Select [MEDIA RESIDUAL] of the maintenance menu.

(1) Press the FUNCTION key in LOCAL.
(2) Press ▲ ▼ to select [MAINTENANCE] and press the ENTER key.
(3) Press ▲ ▼ to select [MEDIA RESIDUAL].
(4) Press the ENTER key.

2 Press ▲ ▼ to select ON/OFF.

```
MEDIA RESIDUAL
SETUP          : OFF
```

3 Press the ENTER key.

```
MAINTENANCE
MEDIA RESIDUAL <ent>
```

4 Press the END key several times to end the setting.

Printing the Remaining Amount of a Media

The present remaining amount of a media can be printed.

- Set "Remaining amount of a media to display" to "ON".
- When you replace the media you use now with another, it is recommended that you print the remaining amount of the media on it.With the remaining amount of a media having been printed beforehand, when you use the replaced media again, you can enter an accurate value in the screen for entering the remaining amount of a media (☞ P.2-12) that appears after media detection.

1 **In LOCAL, Press ▲▼◀▶.**

- LOCAL changes to the origin setting mode.

```
ORIGIN SETUP
0.0        ----
```

2 **▲▼◀▶Press to set a light point of the LED pointer to the changing position.**

- Move the carriage and media with ▲▼◀▶ and set the origin.
- When you do not change the origin, do not press ▲▼◀▶ and proceed to Step 3.
- When you press the ENTER key here, the origin is changed, and the screen returns to LOCAL.

```
ORIGIN SETUP
0.0        0.0
```

Origin (Length) / Origin (Width)

3 **Press the REMOTE key.**

- When you press ▲▼◀▶ , the screen returns to Step 2.
- When you press the END key, the screen returns to LOCAL.

```
MEDIA RESIDUAL DRAW
                <ENT>
```

4 **Press the ENTER key.**

- The remaining amount of a media starts to be printed.
- When the printing has been completed, the screen returns to LOCAL.

Important!

- When the remaining amount of a media has been printed with the origin changed, the origin set here is effective even when subsequent data are printed.

If a Waste Ink Tank Confirmation Message Appears

Ink used in head cleaning, etc. is stored in the waste ink tank on the lower right side of the machine.This machine counts the accumulated amount of discharged ink. When that reaches a specified amount, the machine displays a confirmation message. **(When this message is displayed, consider the replacement of the waste ink tank.)**

If a Message Is Displayed, for Example, When the Machine Is Supplied with Ink

When functions that use the waste ink tank, such as ink-supplying, head cleaning, and PUMP tube washing, are performed, a message that requests you to confirm the state of the waste ink tank may be displayed, depending on the state of the tank.

● When the waste ink tank is almost full:

The message on the right is displayed.

```
Confirm a waste tank
Continue<   >Exchange
```

1 **Check the state of the waste ink tank.**

- When the waste ink tank is almost full:
  (1) Replace the waste ink tank with another. (☞ P.4-28)
  (2) ENTER Press the key to select "Exchange". (The ink discharging amount is reset.)
- When the waste ink tank still has a capacity for waste ink:
  (1) Press the ◀ key to select "Continue". (The ink discharging amount is not reset.)
- In this case, the message of P.4-27 “Confirmation Message in LOCAL” is displayed when it returns to Local.

● When the waste ink tank is completely full:

The message on the right is displayed.

```
Confirm a waste tank
Exchange          :ent
```

1 **Replace the waste ink tank with another (☞ P.4-28) and press the ENTER key.**

- The amount of discharged ink is reset.

Important!

- When you have selected "Exchange" for "almost full" or "completely full" in the above operation, make sure to replace the waste ink tank. (☞ P.4-28)When you use the machine without replacing the waste ink tank, waste ink may overflow from the tank before a confirmation message is displayed.
- This machine does not count the accumulated amount of waste ink discharged when the ST.MAINTENANCE (NOZZLE WASH, PUMP TUBE WASH, and COSTODY WASH) are performed.Before performing these functions, make sure to check the state of the waste ink tank.

Confirmation Message in LOCAL

The message on the right is displayed.

1 **Check the state of the waste ink tank and replace it with another as necessary. (☞ P.4-28)**

When You Do Not Want the Confirmation Message of the Waste Ink Tank to Be Displayed

You can configure the setting so that the confirmation message of the waste ink tank is not displayed.

1 **Select [Waste Ink Warning] of the machine setup menu.**

(1) Press the FUNCTION key in LOCAL.
(2) Press ▲ ▼ to select [MACHINE SETUP] and press the ENTER key.
(3) Press ▲ ▼ to select [Waste Ink Warning].
(4) Press the ENTER key.

2 **Press ▲ ▼ to select OFF.**

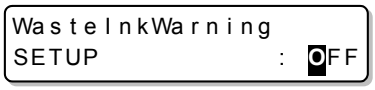

3 **Press the ENTER key.**

4 **Press the END key several times to end the setting.**

Important!

- When you set Waste ink warning to "OFF", the confirmation message is not displayed.Make sure to visually check the amount of ink remaining in the waste ink tank.

Replace the waste ink tank with another

When the right message is displayed, check the waste ink tank immediately, and then replace it according to the condition.

```
<LOCAL.1>          [#01]
!WASTE TANK
```

1 Remove the waste ink tank guard.

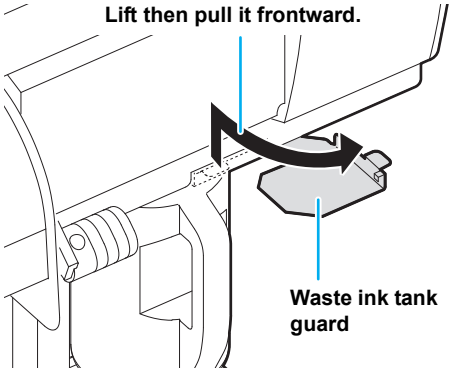

2 Pull it frontward to remove by holding the waste ink tank handle.

- Put a cap on the waste ink tank removed.

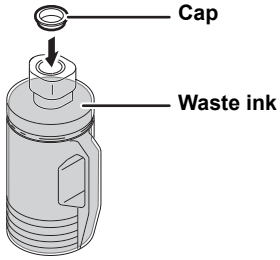

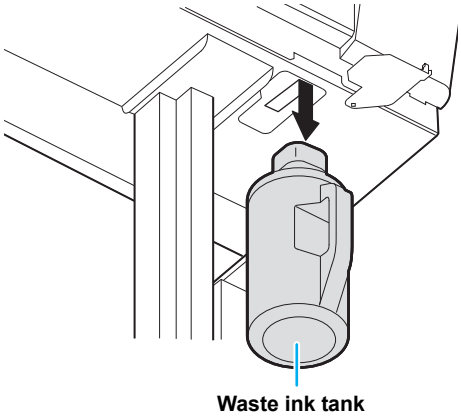

3 Replace the waste ink tank.

(1) Prepare a new waste ink tank (SPC-0117).
(2) Insert the waste ink tank by holding a handle of the tank.

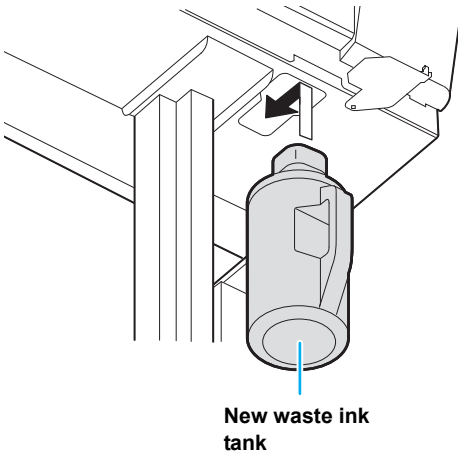

4 Close the waste ink tank guard.

• Hook the waste ink tank guard in a hole of the machine then lock it.

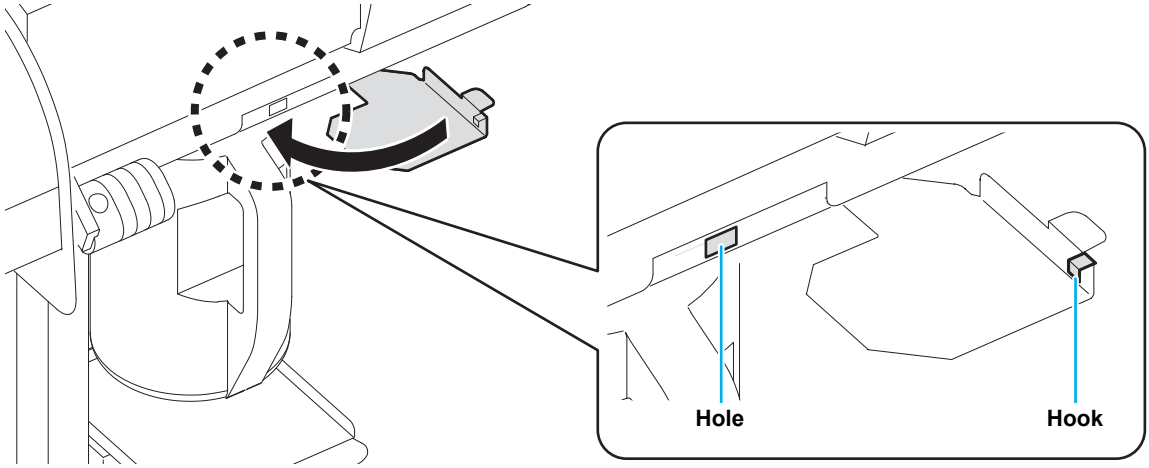

5 Select [Ink Tank Exchange] of the maintenance menu.

(1) Press the FUNCTION key in LOCAL.
(2) Press ▲ ▼ to select [MAINTENANCE] and press the ENTER key.
(3) Press ▲ ▼ to select [Ink Tank Replace].

6 Press the ENTER key.

• The ink discharging amount that is controlled by the machine is reset and the message is cancelled.

```
InkTankExchange
EXCHANGE          :ent
```

7 Press the END key several times to end the setting.

To change the ink color

To change the ink color, perform the procedures below:

When you change the items below, the work by the service person is required. Contact a distributor in your district or our office to call for service.

- When you change the ink set from “four-color model” to “six-color model” etc.

1 “Discharge” the remaining ink in the machine, and “Wash” the head or the tube.

• See P.4-17 “DISCHARGE & WASH”.

2 Fill ink.

• See P.4-19 “Supplying the Machine with Ink Anew”.

- **When washing, use eight special cleaning solution cartridges (sold separately).**
  Wash with the proper cleaning solution cartridge for the used ink type.

Ink Type	Cleaning Solution Type
Sublimation dye ink	Aqueous cleaning solution cartridge (SPC-0259)
Aqueous pigment ink	

To use sublimation transfer ink with more stable quality

When you print with sublimation transfer ink after you have left this machine, color may change due to color material settling.
By shaking the ink cartridge or performing ink filling periodically, the status will be improved. (Before performing ink filling, it is necessary to shake the ink cartridge.)
In this machine, when the time to shake the ink cartridge or to perform ink filling has come, a message (warning preventing color material settling) is displayed to inform you of it.

● When the time to shake the ink cartridge has come

● When the time to perform ink filling

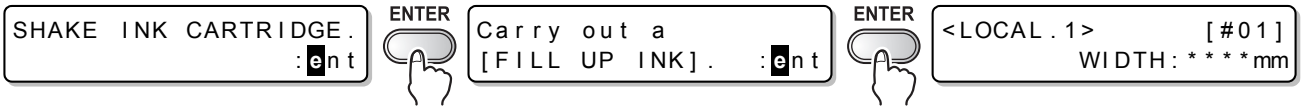

- This message is displayed when the machine is in the local mode or when you switch it from the remote mode to the local mode.
  This does not terminate printing or interfere with continue printing, however, as this is not displayed during remote mode, it is recommended to switch to the local mode by pressing the REMOTE key between printings.

How to shake the ink cartridge

Holding the long side of the ink cartridge with both hands, tilt to right and left by turns to make ink flow, and repeat it about twenty times.

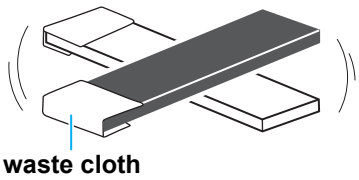

Important!

- If you shake the ink cartridge too strong, it may damage the inside pack and it may cause ink leakage. Be careful about it.
- When the cartridge is new, shake it before taking it out of bag.
- When the cartridge is in-use, be sure to wear the gloves, press waste close to the inserted side and shake it.
- If the remaining amount of ink is less, tilt it until it becomes vertical, as you cannot shake it enough in some cases.

Set the interval to display the warning message (only when using sublimation dye ink)

Depending on the ambient temperature, set the interval to display the warning preventing color material settling.

- The display interval of the message is set to 72 hours in the initial condition.

1 Select [AUTO MAINT.] of the maintenance menu.

(1) Press the FUNCTION key in LOCAL.
(2) Press ▲ ▼ to select [MAINTENANCE] and press the ENTER key.
(3) Press ▲ ▼ to select [AUTO MAINT.].
(4) Press the ENTER key.

2 Press ▲ ▼ to select [Sub-INK WARNING].

```
AUTO MAINT.
Sub-INK WARNING<ent>
```

3 Press the ENTER key.

```
AUTO MAINT.
Sub-INK WARNING= 72h
```

4 Press ▲ ▼ to set the operation time.

- Set value : OFF (disabled) or 1 to 120 hours

```
AUTO MAINT.
Sub-INK WARNING= 84h
```

5 Press the ENTER key.

```
AUTO MAINT.
Sub-INK WARNING<ent>
```

6 Press the END key several times to end the setting.

Replacing the Cutter Blade

The cutter blade is consumable.When the cutter blade gets dull, replace it with a new one (SPA-0107).

Caution

- The blade is sharp.Be careful not to hurt yourself or anyone else.
- Store the cutter blade in a place that is out of the reach of children.In addition, dispose of used cutter blades according to regional laws and regulations.

- When replacing the cutter blade, it is recommended to place a sheet of paper under the cutter blade. This will help pick up the cutter blade if it drops.

1

Press the ST.MAINTE key then press the ENTER key.

• The carriage moves onto the platen.

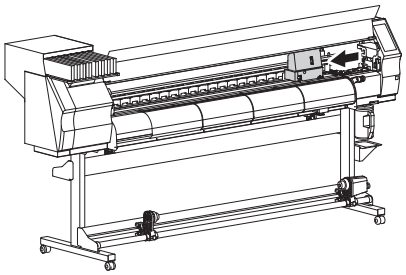

2

Open the front cover.

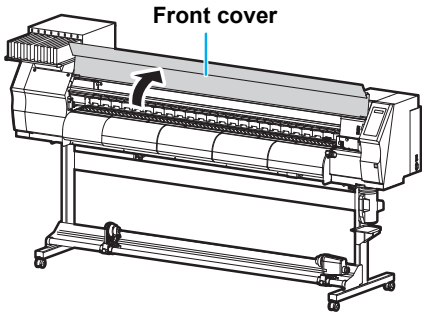

3

Replace the cutter unit by the carriage.

(1) Loosen the screw of the cutter unit.
(2) Remove the cutter unit.
(3) Mount a new cutter unit.
(4) Fasten the screw of the cutter unit to secure the cutter unit.

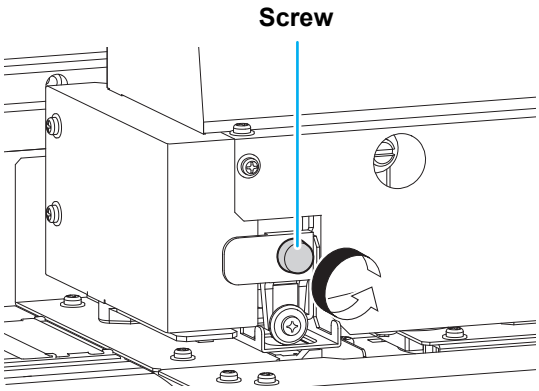

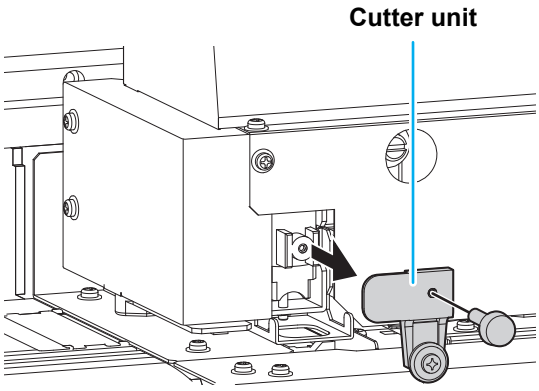

4 **Close the front cover.**

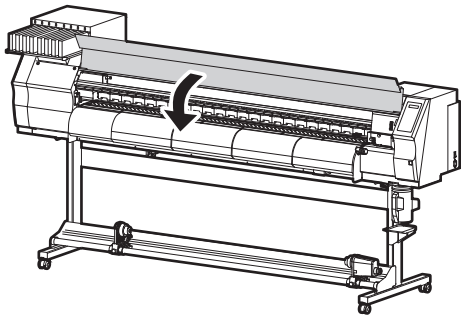

5 **Press the ENTER key.**

• The screen returns to LOCAL.

Chapter 5
Troubleshooting

This chapter

describes the corrective measures to be taken for a phenomenon suspected to be trouble and the procedures to clear the error number displayed on the LCD.

Troubleshooting 5-2
- Power does not turn on 5-2
- The machine does not start printing 5-2
- Media get jammed / media is soiled 5-3
- Image quality is poor 5-4
- Nozzle is clogged 5-4
- Ink cartridge warning appears 5-5

Warning / Error Messages 5-6
- Warning messages 5-6
- Error messages 5-9

Troubleshooting

Take appropriate actions as described below before taking the trouble as a failure.
If still the problem is not solved after troubleshooting, contact your dealer or an office of MIMAKI.

Power does not turn on

In most cases, this is due to improper connection of the power cable for the machine or computer. Check that the power cable is connected properly.

Has the power cable been connected between the machine and a power plug socket ?	**No** →	Securely connect the power cable.
Is the main switch ON ?	**No** →	Turn on the main switch. (☞ P.2-4)
Is the power switch located on the front of machine "ON" ?	**No** →	Turn on the power switch on the front of the machine.

The machine does not start printing

This occurs when the data is not being transmitted to the machine properly.
It can also occur when the printing function does not work properly or the media is not set correctly.

Is the correct interface cable used ?	**No** →	Use the cable exclusive for the device.
Is the interface cable properly connected ?	**No** →	Securely connect the interface cable.
↓ **Yes**		
Is the message on the display indicating that ink has run out ?	**Yes** →	Replace the ink cartridge with a new one.

Media get jammed / media is soiled

Media jamming or stained media is considered to be due to the use of an unsuitable media or improper setting of media.

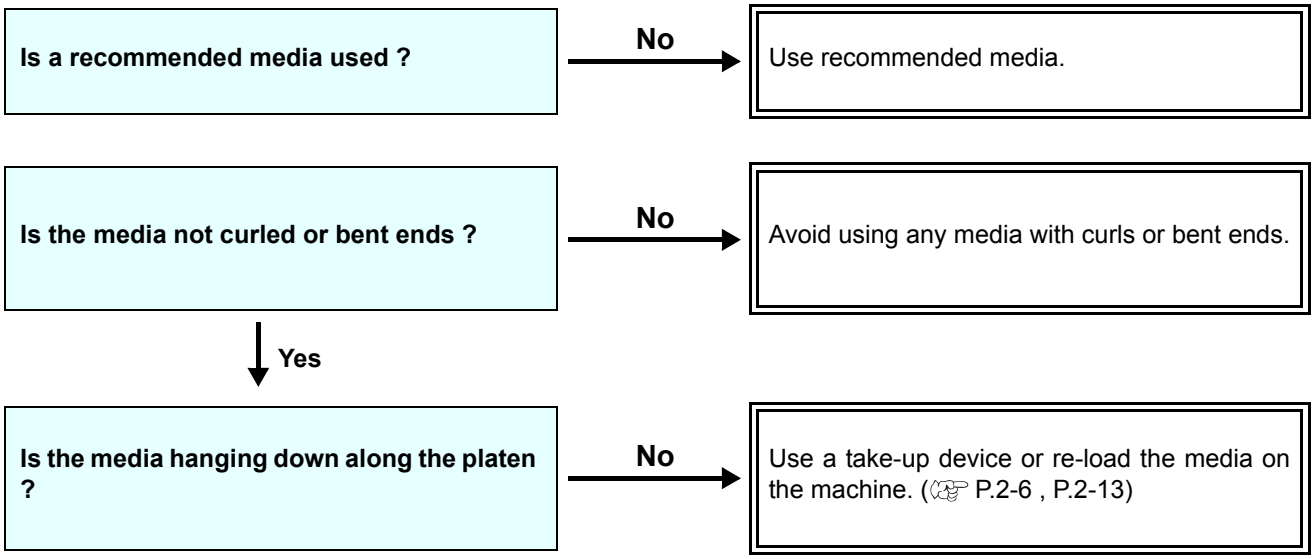

Image quality is poor

This section describes the corrective actions to be taken in case the image quality is not satisfactory.
Take remedy for particular problems with image quality. If the remedy does not work, contact your dealer or an office of MIMAKI.

Phenomenon	Measures
White lines / blur / dark stripes (in the direction of travel of the heads)	**(1)** Execute the head cleaning. (☞ P.2-19) **(2)** Perform maintenance of the inside of the station. (☞ P.4-5) **(3)** Execute the [MEDIA COMP.] function. (☞ P.3-4) **(4)** If any pieces of paper or dust is attached on the path of the heads such as media press, remove it.
Characters are double- or triple-printed in the media feed direction	**(1)** Execute the [MEDIA COMP.] function. (☞ P.3-4)
Disagreement in print positions between outward trip and homeward trip	**(1)** Execute the [DROP POSITION] function. (☞ P.3-6)
Ink drops falling on media during printing	**(1)** Execute the wiper cleaning. (☞ P.4-5) **(2)** Execute the ink cap cleaning. (☞ P.4-5) **(3)** Clean around the head. (☞ P.4-14) **(4)** Execute the head cleaning [NORMAL]. (☞ P.2-19) **(5)** When the phenomenon is not improved, execute the periodical wiping setting. (☞ P.3-18)

Nozzle is clogged

When nozzle clogging is not dissolved even after the head cleaning referring to P.2-19, make sure the following operations.

- **Fill ink by the operations of P.4-16.**
- **Wash the head nozzle by the operations of P.4-8.**
- **By performing the operations in P.4-23, select the head (when one of the two heads is normal).**

Ink cartridge warning appears

If an ink cartridge trouble is detected, a warning message appears and none of printing, cleaning and all the other operations that use ink is available.
In this case, replace the ink cartridge in question immediately.

Important!

- Once cartridge trouble is displayed, do not leave the ink cartridge without replacing it for a long time; otherwise, the machine will lose the nozzle clogging prevention function.
  If nozzles are clogged, the machine must be repaired by MIMAKI's service engineer.

Displaying the description of ink cartridge trouble

The contents of cartridge error are confirmable by the following operations.

1 **Press the ENTER key in LOCAL.**

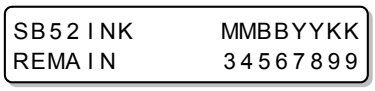

2 **Press the ENTER key.**

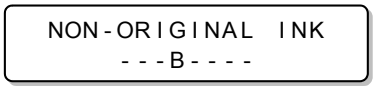

- When multiple cartridge defects occur and if you press the ENTER key or ◀ ▶, they are displayed by turns.

Warning / Error Messages

If some trouble occurs, the buzzer sounds and the display shows a corresponding error message.
Take an appropriate remedy for the displayed error.

Warning messages

Message	Cause	Solution
Close a cover.	The front cover or the maintenance cover is opened.	Check the front cover and maintenance covers. If the same error message appears again even after closing all the covers, contact your local distributor to call for service.
** NO MEDIA **	A media has not been set.	Set media.
!EXCHANGE BATTERY	The battery life end of the internal clock is detected.	Contact your local distributor to call for service.
<LOCAL.1> [#01] !Replace a WIPER	Time to replace the wiper in the capping station with a new one has come. (The wiping count has reached the specified value.)	Replace the wiper with a new one. (☞ P.4-7)
<LOCAL.1> [#01] !Do TEST DRAW	The nozzle recovery cannot be expected because the machine has been left standing for a prolonged period of time.	Perform test printing then check nozzle clogging. In the case of nozzle clogging observed, perform cleaning. (☞ P.2-19) In the case of significant nozzle clogging observed, perform the operations of P.4-8 “Washing of Head nozzle”.
<LOCAL.1> [#01] NEAR END MMBB----	Ink for one supply path has been nearly used up.	Replace the cartridge for the supply path corresponding to the indicated color. You can print without replacing the cartridge (until INK END is displayed). However, the machine returns to local mode every completion of printing one file.
REMOTE.1 [#01] NEAR END MMBB----		
<LOCAL.1> [#01] INK END ----YYKK	Ink for one supply path has been completely used up.	Replace the cartridge for the supply path corresponding to the indicated color.
REMOTE.1 [#01] INK END ----YYKK		
<LOCAL.1> !CAR [#01]	Ink cannot be supplied due to the cartridge per one supply path.	Check the cartridge for the supply path corresponding to the indicated color.
REMOTE.1 !CAR [#01]		
<LOCAL.1> [#01] REINSERT CARTRIDGE	Ink near end was detected right after the cartridge with much remaining amount of ink has been inserted.	Pull out the inserted cartridge and insert it again. If the message will be displayed again, contact a distributor in your district or our office to call for service.

Message	Cause	Solution
<LOCAL.1> !CAR [#01]	There is a problem with installed ink cartridges. (In the case of overlapping with other warnings, the display turns to "< LOCAL.1> !CAR/WASH" and [#**] is erased.)	Check the content of the warning details in the guidance function.
REMOTE.1 !CAR [#01]		
INK NEAR END MMBB ----	The ink of the ink cartridge has been nearly used up.	Replace the cartridge generating the warning with a new one.
INK END ---- YYKK	The ink of the ink cartridge has been completely used up.	Replace the cartridge generating the warning with a new one.
NON-ORIGINAL INK ---- YYKK	The ink cartridge is not MIMAKI genuine.	Replace the cartridge generating the warning with a MIMAKI genuine.
WRONG INK IC ---- YYKK	The IC chip of the ink cartridge cannot be read normally.	Remove the cartridge generating the warning once and install it again. If the same warning message still appears, contact your local distributor to call for service.
Kind of INK ---- ----	The ink of the ink cartridge is different in type from the ink currently supplied.	Check the ink type of the cartridge generating the warning.
Color of INK ---- ----	The ink of the ink cartridge is different in color from the ink currently supplied.	Check the ink color of the cartridge generating the warning.
WRONG CARTRIDGE ---- ----	There is trouble with an installed ink cartridge.	Check the cartridge generating the warning.
NO CARTRIDGE ---- ----	An ink cartridge has not been installed in the slot.	Install an appropriate cartridge in the slot generating the warning.
Expiration ---- ----	The specified expiration date of an ink cartridge has passed.	Replace the cartridge generating the warning with a new one. The cartridge may be used until one month passes after the specified expiration date.
Expiration:1MONTH ---- ----	The expiration date of an ink cartridge has passed (one month has passed after the specified expiration date).	The red LED blinks. Replace the cartridge generating the warning with a new one. The cartridge may be used until two months pass after the specified expiration date.
Expiration:2MONTH ---- ----	The expiration date of an ink cartridge has passed (two months have passed after the specified expiration date).	Replace the cartridge generating the warning with a new one.
EXPIRED INK IN USE ---- ----	The ink has been extended the expiry month and has been used.	Replace the ink cartridge. (☞ P.1-12)
COMPLETELY EXPIRED ---- ----	For the ink extended the expiry month, six months have passed since the expiry month shown on the cartridge.	Replace the ink cartridge. (☞ P.1-12)

Message	Cause	Solution
INK REMAIN ZERO ---- ----	Remaining amount of ink in an ink cartridge is zero.	Replace the cartridge generating the warning with a new one.
!WASTE TANK	The waste ink tank is nearly full.	Replace the waste ink tank then execute [MAINTENANCE]-[Ink Tank Exchange]. (☞ P.4-28)

Error messages

When an error message is displayed, eliminate the error according to the chart below.
If the same error message appears again, contact your dealer or an office of MIMAKI to call for service.

Message	Cause	Solution
***** ERROR 01 ***** MAIN ROM	An error occurred in the circuit board system. (ROM)	Turn off the power to the machine and turn it on after a while. If the same error message appears again, contact your local distributor to call for service.
***** ERROR 02 ***** MAIN RAM	An error occurred in the circuit board system. (RAM)	
***** ERROR 03 ***** POWER +5V	An error occurred in the circuit board system. (POWER +5V)	
***** ERROR 03 ***** POWER +24V	An error occurred in the circuit board system. (POWER +24V)	
***** ERROR 03 ***** POWER +42V	An error occurred in the circuit board system. (POWER +42V)	
***** ERROR 04 ***** F-ROM	An error occurred in the circuit board system. (F-ROM)	
***** ERROR 06 ***** SD-RAM	An error occurred in the circuit board system. (SD-RAM)	
***** ERROR 07 ***** HEAD (----)	An error in heads was detected. (Abnormal temperature was detected.)	
***** ERROR 07 ***** VOLTAGE (----)	An error in heads was detected. (Abnormal voltage was detected.)	
***** ERROR 08 ***** LinearENCODER:SENSOR	An error occurred in the linear encoder. (Counting was unable.)	
***** ERROR 08 ***** LinearENCODER:DIR.	An error occurred in the linear encoder. (Error in the mounting direction.)	
***** ERROR 08 ***** LinearENCODER:COUNT	An error occurred in the linear encoder. (Read-out count error)	
***** ERROR 09 ***** FPGA ERROR	An error occurred in the circuit board system. (FPGA PDC)	
***** ERROR 09 ***** FPGA PRAM BUSY	An error occurred in the circuit board system. (FPGA PDC)	
***** ERROR 09 ***** HDC ERROR (----)	An error occurred in the circuit board system. (FPGA HDC)	
illegal IPT xxx xxxxxxxxxxxx	CPU irregular interrupt has occurred.	
Prg Err TK=xxx ASSRT [xxxx] [xxxx] [xxxx]	A program error has been alerted.	

Message	Cause	Solution
***** ERROR 10 ***** COMMAND ERROR	The machine received some data other than command data.	Securely connect the interface cable in position. Use an interface cable conforming to the specifications.
***** ERROR 11 ***** PARAMETER ERROR	Any parameter outside the range of acceptable numeric values was received.	Turn off the main power to the machine and turn it on after a while. If the same error message appears again, contact your local distributor to call for service.
***** ERROR 16 ***** MRL COMMAND	The received data does not follow the command system set by the machine.	Transmit data that is compatible with the command system supported by this machine.
***** ERROR 25 ***** FULL-SPEED	An error occurred in communication between the host computer and the interface board for USB2.0 connection.(Full-Speed mode connection)	Check that the host PC supports the USB2.0 interface. (Communication can be resumed without changing any setting. However, it is recommend to use the connection in High-Speed mode.)
***** ERROR 34 ***** DATA REMAIN	It is being tried to change settings for functions though there remains received data that has not yet been printed.	Print all the received data or execute the data clear function. Then, change settings.
***** ERROR 40 ***** MOTOR ALARM X	An excessive load was applied to the X motor.	Turn off the main power to the machine and turn it on after a while. If the same error message appears again, contact your local distributor to call for service.
***** ERROR 41 ***** MOTOR ALARM Y	An excessive load was applied to the Y motor.	
***** ERROR 42 ***** X OVER CURRENT	An error due to an excessive current of the X motor was detected.	
***** ERROR 43 ***** Y OVER CURRENT	An error due to an excessive current of the Y motor was detected.	
***** ERROR 45 ***** CAPPING:PARAMETER	An error occurred in the capping control. (Improper parameter adjustment value)	
***** ERROR 46 ***** WIPER	An error occurred in the wiper control.	Turn off the main power to the machine and turn it on after a while. If the same error message appears again, contact your local distributor to call for service.
***** ERROR 50 ***** MEDIA SET POSITION	Paper could not be detected. The media set position or media itself is not proper.	If the same error message appears again even after setting the media properly, contact your local distributor to call for service.
***** ERROR 50 ***** MEDIA DETECT	The set position of the media is not proper. The media detection has not completed.	Set the media to the proper position again. (☞ P.2-8, P.2-14)

Message	Cause	Solution
***** ERROR 51 ***** Y-ORIGIN	Y-origin could not be detected.	Turn off the main power to the machine and turn it on after a while. If the same error message appears again, contact your local distributor to call for service.
**** ERROR 120 **** ENVIRONMENT TEMP(LO)	The ambient temperature is out of the usable temperature range (too low).	Adjust the ambient temperature of the installation place. (☞ P.3-33)
**** ERROR 121 **** ENVIRONMENT TEMP(HI)	The ambient temperature is out of the usable temperature range (too high).	
**** ERROR 144 **** CARTRIDGE SET!	There is a slot where no cartridge has been inserted.	Set a cartridge.
**** ERROR 200 **** HEAD MEMORY (----)	An error occurred on the head unit memory.	Turn off the main power to the machine and turn it on after a while. If the same error message appears again, contact your local distributor to call for service.
**** ERROR 202 **** DVEICE CONSTRUCTION	The head is not connected. An error occurred on the head slider board. The head is not MIMAKI genuine.	
**** ERROR 203 **** SDRAM SIZE	A SD-RAM of the size required for the machine has not been equipped.	Turn off the main power to the machine and turn it on after a while. If the same error message appears again, contact your local distributor to call for service. (When a usable SD-RAM is available, the machine can be started as is. However, a printing speed may be slow depending on resolution.)
**** ERROR 205 **** 42V HEAD Voltage	A SD-RAM of the size required for the machine has not been equipped.	Turn off the main power to the machine and turn it on after a while. If the same error message appears again, contact your local distributor to call for service.
**** ERROR 207 **** XXXXXXXXXX	An error is detected on the wave-form printed on the lower line of the display.	Turn off the main power to the machine and turn it on after a while. If the same error message appears again, contact your local distributor to call for service.
**** ERROR 208 **** CHECK MAIN PCB ID XX	Model ID of main PCB is different. (XX is ID code.)	
**** ERROR 250 **** Y COORDINATES	An error was detected during scan-ning operation.	Turn off the main power to the machine and turn it on after a while. If the same error message appears again, contact your local distributor to call for service.
**** ERROR 251 **** SYSTEM ERROR	A system error occurred.	

Chapter 6
Appendix

This chapter

contains the lists of the specifications and functions of this machine.

Specifications 6-2
Machine specifications 6-2
Ink specifications 6-3
Setting orders depending on ink type 6-4
Setting orders of ink cartridges 6-4
Maintenance intervals of automatic maintenance function 6-4
Sheet for inquiry 6-5
Warning labels 6-6
Function Flowchart 6-8

Specifications

Machine specifications

Item		TS34-1800
Print head	Method	Drop-on-demand piezoelectric print heads
	Specification	2 head
Drawing mode (scan x feed)		540 x 360dpi *1 / 720 x 540dpi / 540 or 720 x 720dpi / 540 x 900dpi / 540 or 720 x 1080dpi / 720 x 1440dpi / 1440 x 1440dpi
Usable inks	Dedicated aqueous ink.	Sublimation dye ink (Sb) : 4 colors (Y,M,BI,K or DK) 6 colors (Y,M,BI,K or DK,LBI,Lm) 6 colors (Y,M,BB,K or DK,LBB,Lm) Aqueous pigment ink (Pig) : 4 colors (Y,M,C,K) 6 colors (Y,M,C,K,Lc,Lm)
Ink supply		Supplying from ink cartridges through tubes. Ink cartridge replacement type : Only at 4 colors: Supplying by Toggle switchover with 2 cartridges/color
Capacity of ink cartridge	Dedicated aqueous ink	6-color set of cartridges : 440cc 1 cartridge for each color (two only for M, C or M, BI) 4-color set installed : 440cc 2 cartridges for each color
Media type	Dedicated aqueous ink	Photo-paper , Synthetic paper , Duplex paper
Max. printing width		1900mm
Roll Media size	Maximum	1910mm
	Minimum	210mm
	Thickness	1.0 mm or less
	Roll outside diameter	ϕ 250mm or less
	Roll weight *2	25kg or less
	Roll inside diameter	3 or 2 inches
	Printing surface	Side facing outward
	Roll end treatment	The roll end is gently fixed to the core with weak-adhesive tape or weak glue for easy removal.
Leaf media size	Maximum	2642mm
	Minimum	210mm
Margin	Leaf media	Left end and right end : 25 mm (Default) Front : 40.0 mm Rear : 100 mm
	Roll media	Left end and right end : 25 mm (Default) Front : 40.0 mm Rear : 100 mm
Distance accuracy	Absolute accuracy	Whichever the larger one of ± 0.3 mm or ± 0.3 % of the designated
	Reproducibility	Whichever the larger one of ± 0.2 mm or ± 0.1 % of the designated
Perpendicularity		± 0.5 mm / 1000 mm
Media skew		5 mm or less / 10 m variable
Head height adjustment		L range : 2.0mm / 3.0mm 2 levels adjustable H range : 3.0mm / 4.0mm 2 levels adjustable
Cutting of media		Cutting of Y direction by the head cutter, Cutting accuracy (steps) : 0.5 mm or less.
Media delivery		Take-up device supplied as a standard accessory (switching possible between face in and face out).
Waste ink tank		Bottle type (2,000 cc)
Interface		USB 2.0
Command		MRL- III
Noise	during standby	Less than 58 dB (FAST-A, Front & Rear & Left & Right 1 m)
	during continuous printing	Less than 65 dB
	during discontinuous printing	Less than 70 dB
Safety Standard		VCCI-Class A, FCC-Class A, UL 60950, CE Marking (EMC,Low Voltage Directive,Machinery Directive), CB Report, RoHS
Power		AC100 - 120 ± 10% , AC220 - 240 ± 10% , 50/60Hz ± 1Hz , 3A or less

Item		TS34-1800
Power consumption		360 W or less
Reco-mended Environ-ment	Available temp.	20 °C to 35 °C
	Humidity	35 to 65% Rh (No condensation)
	Guaranteed temp.	20 °C to 25 °C
	Temperature change	± 10 °C / h or less
	Dust	Equivalent to normal office level
	Highest operation height	2000 m
Weight		210 kg
Outside dimensions		2828 mm(W) x 739 mm(D) x 1424 mm(H)

*1. This resolution can be used only when using sublimation transfer ink Sb53.
*2. Without deflection of the roll when it is retained at both ends.

Ink specifications

Item			
Supply		Dedicated sublimation dye ink cartridge	
Color		Black ink cartridge Blue ink cartridge Magenta ink cartridge Yellow ink cartridge Light blue ink cartridge Light magenta ink cartridge Deep black ink cartridge	Black ink cartridge Cyan ink cartridge Magenta ink cartridge Yellow ink cartridge Light cyan ink cartridge Light magenta ink cartridge
Ink capacity		220cc / 440cc per cartridge	
Shelf life		The period is printed on the ink cartridge. Within three months after opening the package even in the available period.	
Storage tem-perature	Storage	10 to 35°C (Average daily temperature) • Be sure to keep a vessel in the airtight condition. • Be sure to keep a vessel in a dry, well-ventilated, cool and dark location.	
	Transporta-tion	0 to 40°C • Avoid the condition lower than -0 °C and higher than 40 °C.	

Important!

- **Do not disassemble ink cartridges and do not refill them with ink.**
- **Ink could freeze if kept in a cold place for an extended period.**
  - When aqueous ink is used, if the ink freezes, the quality is changed and the ink becomes unusable.
    Store the ink in an environment that will not freeze the ink.

Setting orders depending on ink type

The setting value and the setting orders of the ink cartridges differ depending on the ink type you use.

Setting orders of ink cartridges

The orders of ink cartridges set in the ink station differ depending on the ink set you use.

- Set the ink cartridge according to the cartridge label under the ink station.

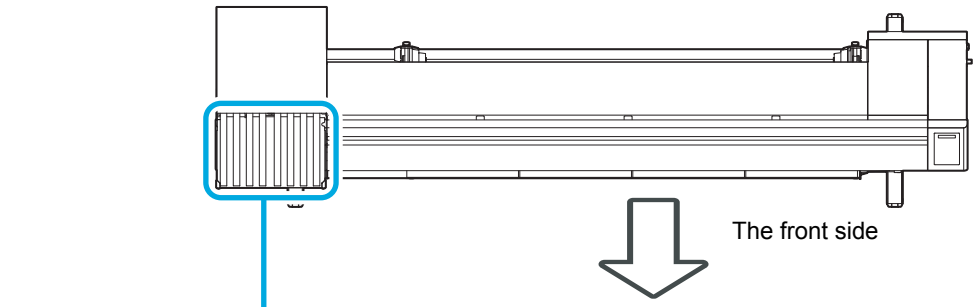

4 colors model	Sublimation dye ink	M	M	Bl	Bl	Y	Y	K	K
	Aqueous pigment ink	M	M	C	C	Y	Y	K	K
4 colors model	Sublimation dye ink	M	Lm	Bl	M	LBl	Bl	K	Y
	Aqueous pigment ink	M	Lm	C	M	Lc	C	K	Y

Maintenance intervals of automatic maintenance function

The default values of the automatic maintenance functions set in the automatic function differ depending on the ink type you use.

Function name	Default value	
	Sublimation dye ink	Aqueous pigment ink
REFRESH maintenance intervals	4h	OFF
PUMP TUBE WASH maintenance intervals	48h	OFF
CLEANING maintenance intervals	OFF	OFF

Sheet for inquiry

Use this sheet for troubles and abnormal functions of the machine.
Fill in the following necessary items, and then fax the sheet to our sales office.

Company name	
Person in charge	
Telephone number	
machine model	
Operating OS	
Machine information *1	
Error message	
Contents of inquiry	

*1. Refer to "Confirming Machine information" of "Convenient using" then fill in necessary information. (☞ P.3-38)

Warning labels

Warning labels are stuck on the machine. Be sure to fully understand the warning given on the labels.
If a warning label is illegible due to stains or has come off, purchase a new one from a distributor or our sales office.

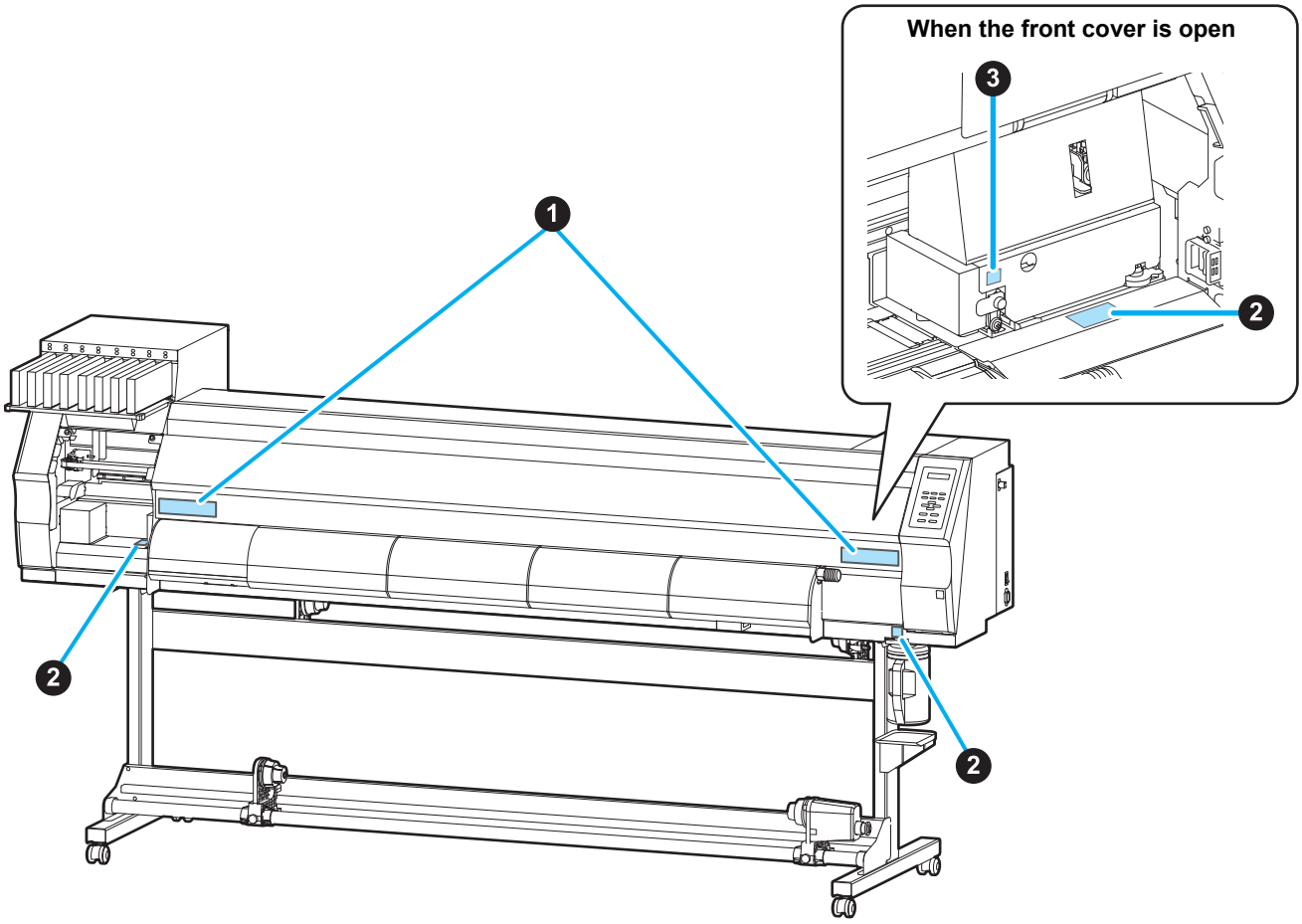

No.	Reorder	Label
1	M901549	⚠注　意 / 滚轮转动时，请勿将手插入前面外盖的内部。 ⚠注　意 / キャリッジ動作中は、フロントカバーの中に指を入れないでください。 ⚠CAUTION / -MOVING CARRIAGE- Do not put fingers inside this area ⚠ACHTUNG / -Beweglicher Wagen- Finger nicht in diesen Bereich bringen. ⚠ATTENTION / -CHARIOT MOBILE- Ne pas mettre de doigts dans cette zone.
2	M903330	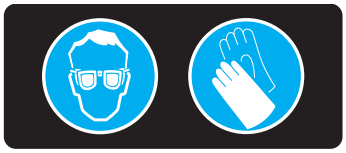
3	M903405	

Function Flowchart

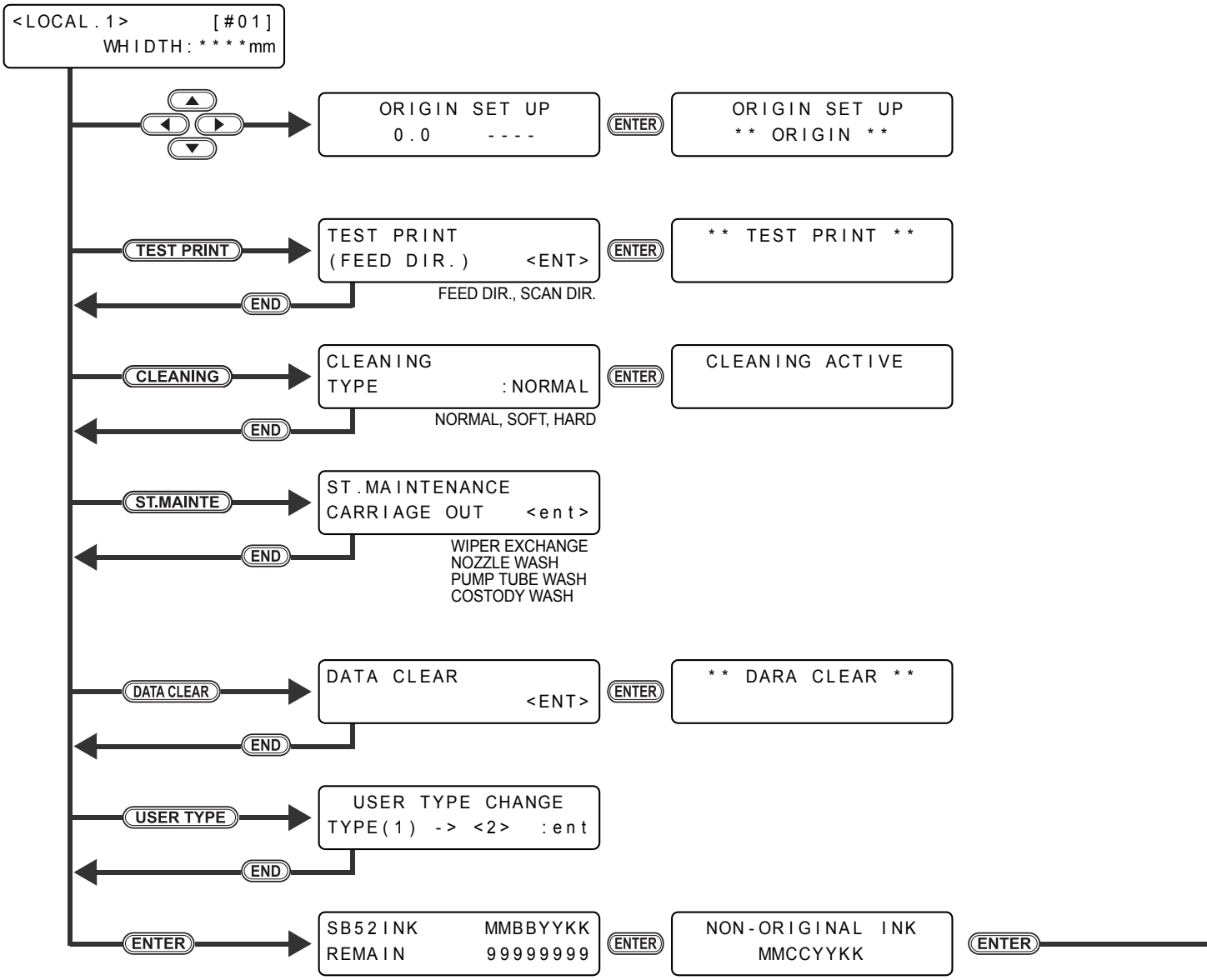

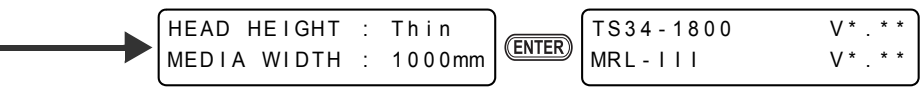
HEAD HEIGHT : Thin
MEDIA WIDTH : 1000mm
ENTER
TS34-1800 V*.**
MRL-III V*.**

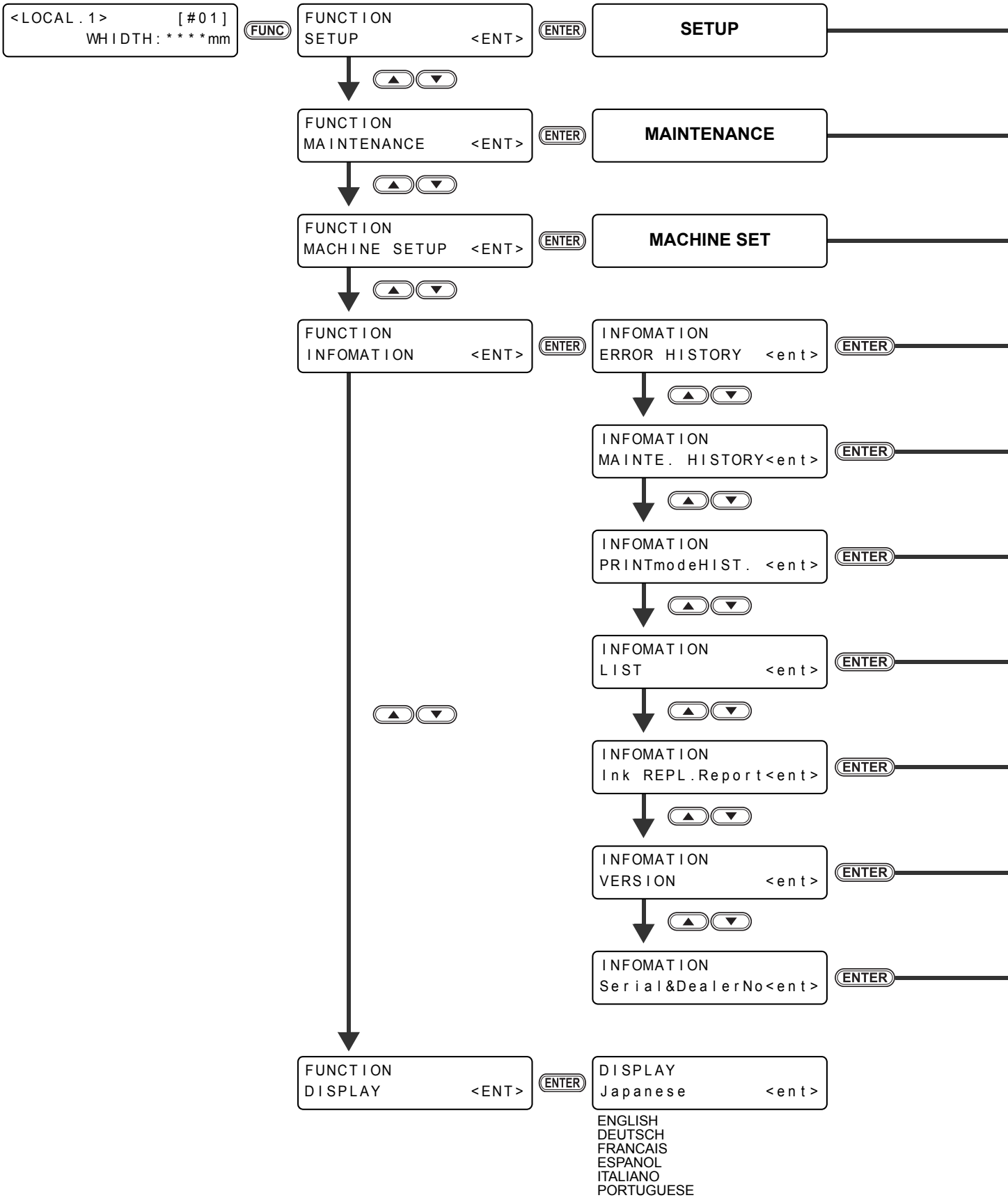
<LOCAL.1> [#01]
WHIDTH:****mm
FUNC
FUNCTION
SETUP <ENT>
ENTER
SETUP
FUNCTION
MAINTENANCE <ENT>
ENTER
MAINTENANCE
FUNCTION
MACHINE SETUP <ENT>
ENTER
MACHINE SET
FUNCTION
INFOMATION <ENT>
ENTER
INFOMATION
ERROR HISTORY <ent>
ENTER
INFOMATION
MAINTE. HISTORY<ent>
ENTER
INFOMATION
PRINTmodeHIST. <ent>
ENTER
INFOMATION
LIST <ent>
ENTER
INFOMATION
Ink REPL.Report<ent>
ENTER
INFOMATION
VERSION <ent>
ENTER
INFOMATION
Serial&DealerNo<ent>
ENTER
FUNCTION
DISPLAY <ENT>
ENTER
DISPLAY
Japanese <ent>
ENGLISH
DEUTSCH
FRANCAIS
ESPANOL
ITALIANO
PORTUGUESE

To P.6-12

To P.6-16

To P.6-20

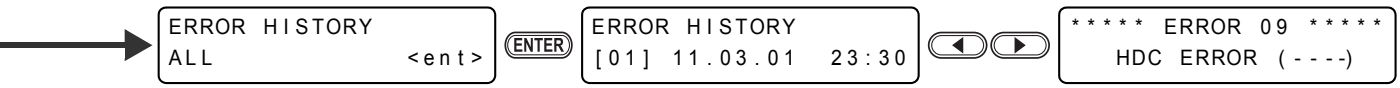

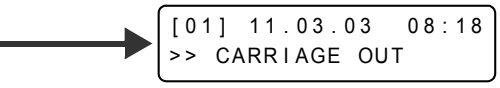

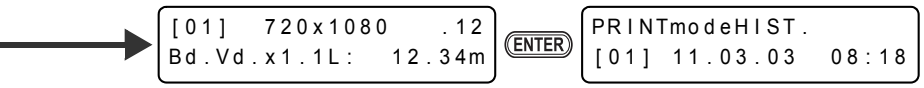

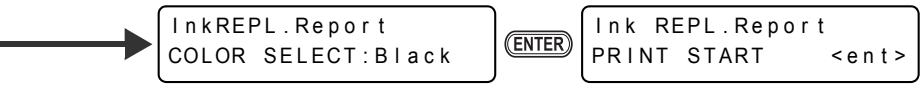

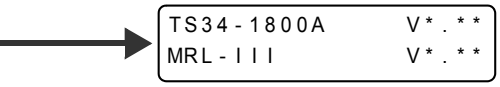

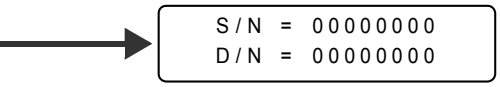

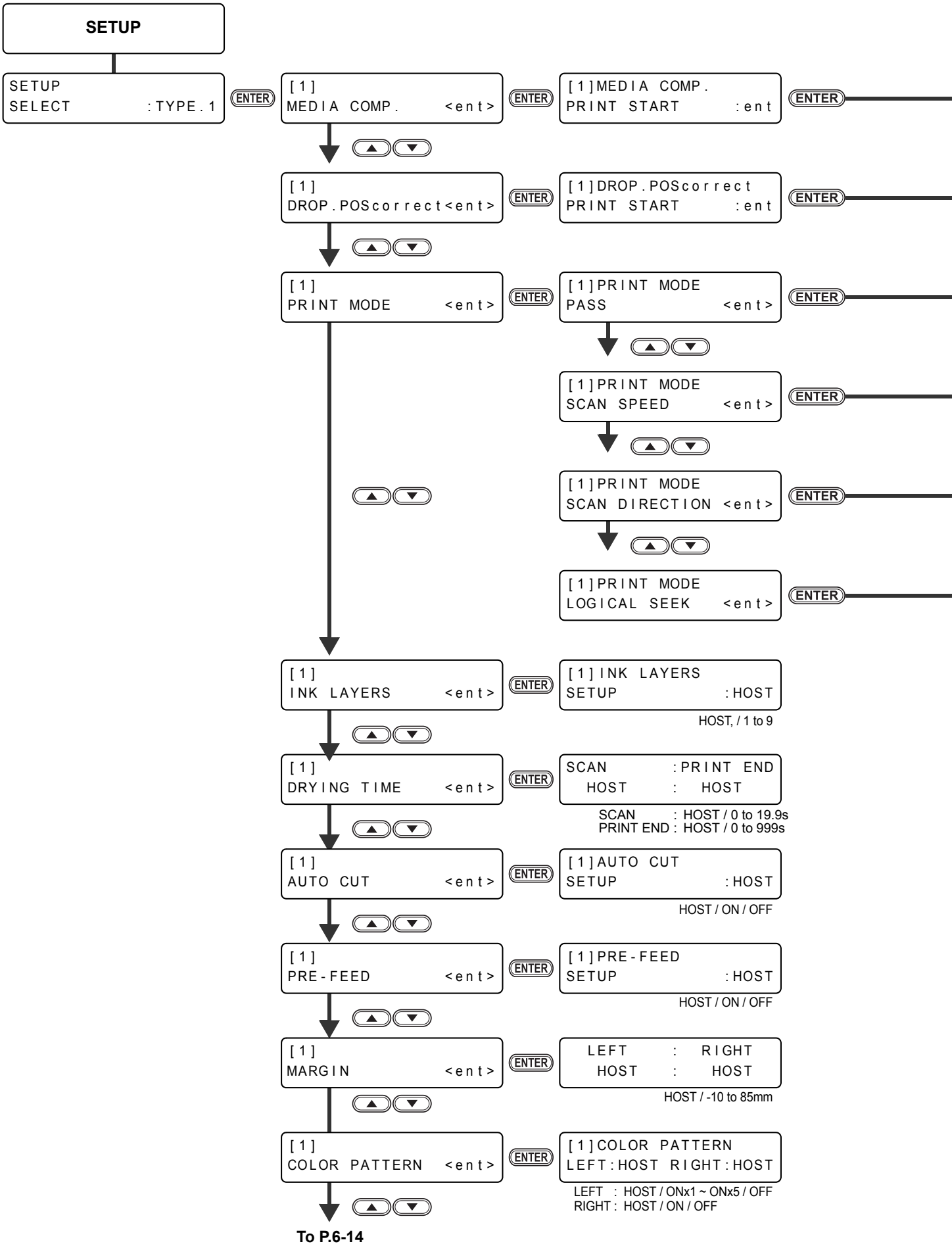
SETUP
SETUP
SELECT :TYPE.1
ENTER
[1]
MEDIA COMP. <ent>
ENTER
[1]MEDIA COMP.
PRINT START :ent
ENTER
[1]
DROP.POScorrect<ent>
ENTER
[1]DROP.POScorrect
PRINT START :ent
ENTER
[1]
PRINT MODE <ent>
ENTER
[1]PRINT MODE
PASS <ent>
ENTER
[1]PRINT MODE
SCAN SPEED <ent>
ENTER
[1]PRINT MODE
SCAN DIRECTION <ent>
ENTER
[1]PRINT MODE
LOGICAL SEEK <ent>
ENTER
[1]
INK LAYERS <ent>
ENTER
[1]INK LAYERS
SETUP :HOST
HOST, / 1 to 9
[1]
DRYING TIME <ent>
ENTER
SCAN :PRINT END
HOST : HOST
SCAN : HOST / 0 to 19.9s
PRINT END : HOST / 0 to 999s
[1]
AUTO CUT <ent>
ENTER
[1]AUTO CUT
SETUP :HOST
HOST / ON / OFF
[1]
PRE-FEED <ent>
ENTER
[1]PRE-FEED
SETUP :HOST
HOST / ON / OFF
[1]
MARGIN <ent>
ENTER
LEFT : RIGHT
HOST : HOST
HOST / -10 to 85mm
[1]
COLOR PATTERN <ent>
ENTER
[1]COLOR PATTERN
LEFT:HOST RIGHT:HOST
LEFT : HOST / ONx1 ~ ONx5 / OFF
RIGHT : HOST / ON / OFF

To P.6-14

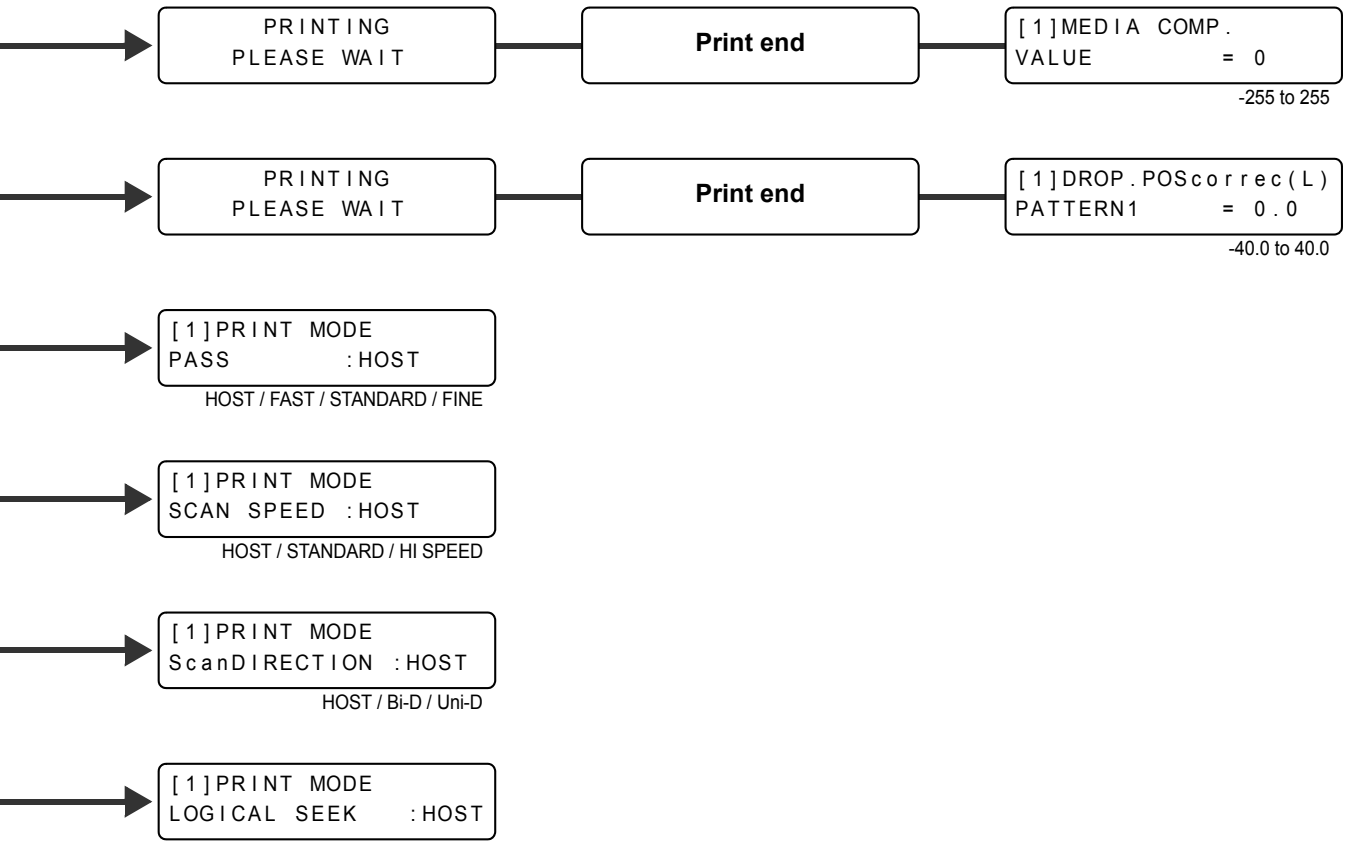
PRINTING
PLEASE WAIT
Print end
[1]MEDIA COMP.
VALUE = 0
-255 to 255
PRINTING
PLEASE WAIT
Print end
[1]DROP.POScorrec(L)
PATTERN1 = 0.0
-40.0 to 40.0
[1]PRINT MODE
PASS :HOST
HOST / FAST / STANDARD / FINE
[1]PRINT MODE
SCAN SPEED :HOST
HOST / STANDARD / HI SPEED
[1]PRINT MODE
ScanDIRECTION :HOST
HOST / Bi-D / Uni-D
[1]PRINT MODE
LOGICAL SEEK :HOST

From P.6-12

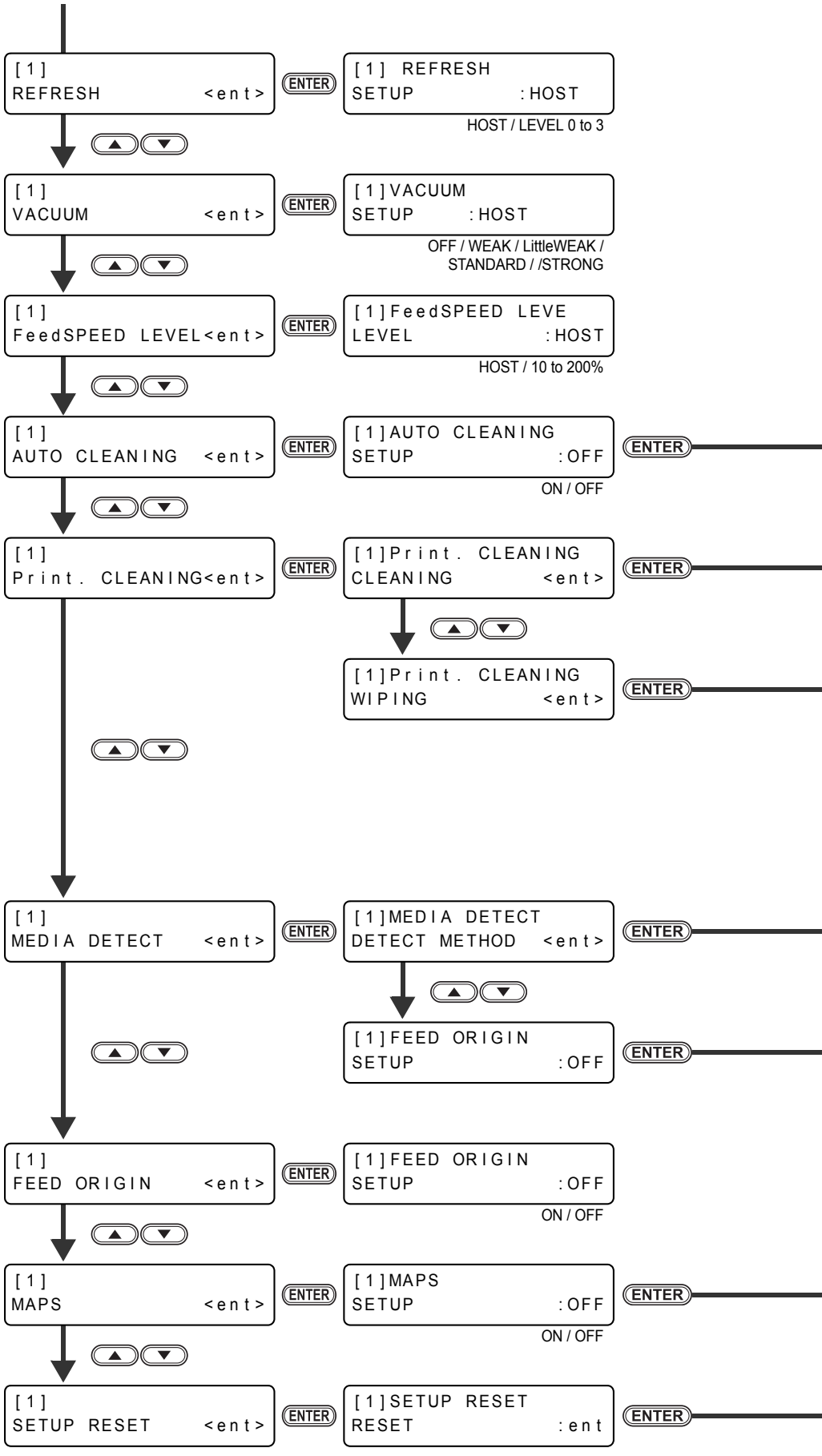
[1]
REFRESH <ent>
ENTER
[1] REFRESH
SETUP :HOST
HOST / LEVEL 0 to 3
[1]
VACUUM <ent>
ENTER
[1]VACUUM
SETUP :HOST
OFF / WEAK / LittleWEAK /
STANDARD / /STRONG
[1]
FeedSPEED LEVEL<ent>
ENTER
[1]FeedSPEED LEVE
LEVEL :HOST
HOST / 10 to 200%
[1]
AUTO CLEANING <ent>
ENTER
[1]AUTO CLEANING
SETUP :OFF
ENTER
ON / OFF
[1]
Print. CLEANING<ent>
ENTER
[1]Print. CLEANING
CLEANING <ent>
ENTER
[1]Print. CLEANING
WIPING <ent>
ENTER
[1]
MEDIA DETECT <ent>
ENTER
[1]MEDIA DETECT
DETECT METHOD <ent>
ENTER
[1]FEED ORIGIN
SETUP :OFF
ENTER
[1]
FEED ORIGIN <ent>
ENTER
[1]FEED ORIGIN
SETUP :OFF
ON / OFF
[1]
MAPS <ent>
ENTER
[1]MAPS
SETUP :OFF
ENTER
ON / OFF
[1]
SETUP RESET <ent>
ENTER
[1]SETUP RESET
RESET :ent
ENTER

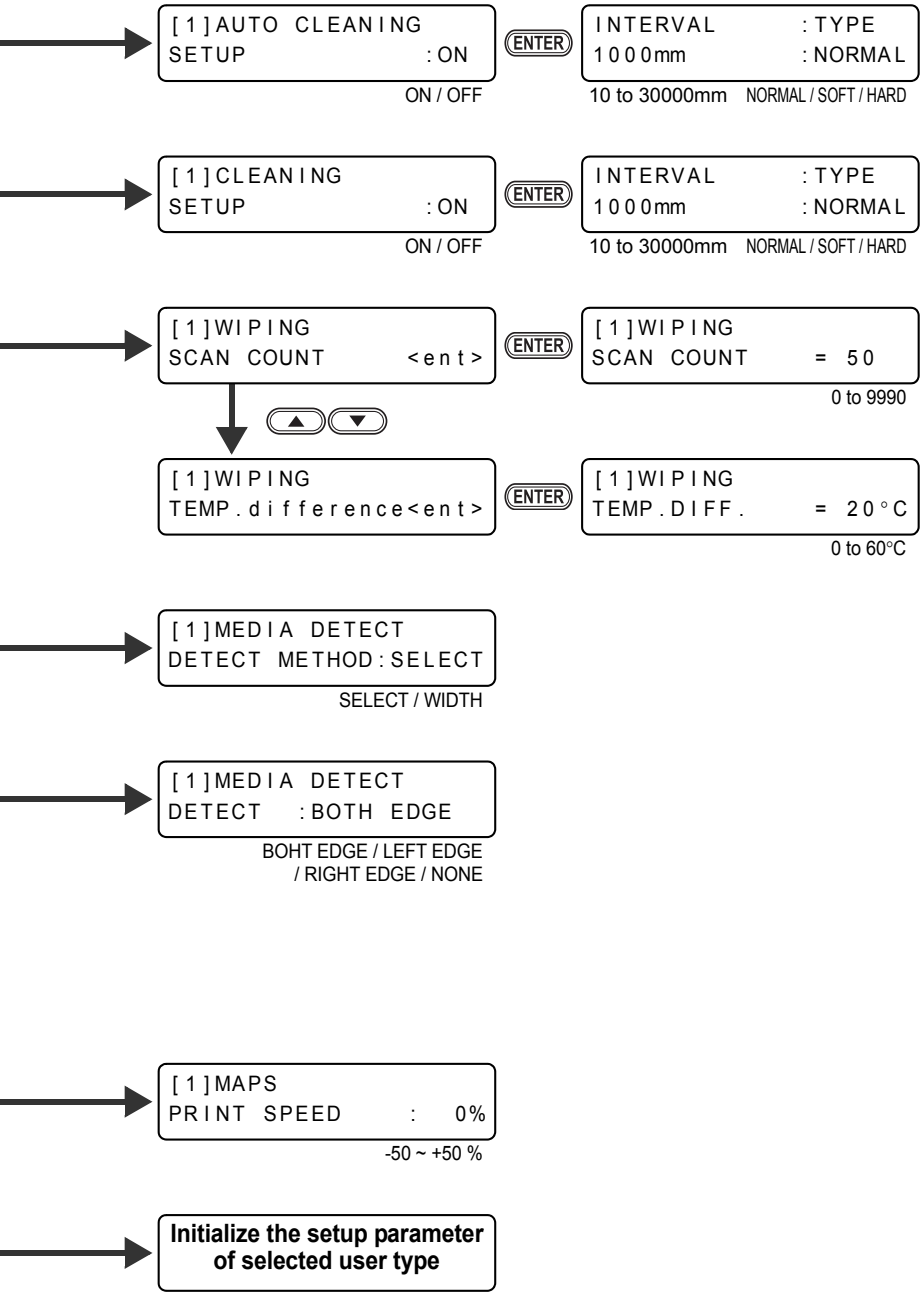
[1]AUTO CLEANING
SETUP :ON
ON / OFF
ENTER
INTERVAL :TYPE
1000mm :NORMAL
10 to 30000mm NORMAL / SOFT / HARD
[1]CLEANING
SETUP :ON
ON / OFF
ENTER
INTERVAL :TYPE
1000mm :NORMAL
10 to 30000mm NORMAL / SOFT / HARD
[1]WIPING
SCAN COUNT <ent>
ENTER
[1]WIPING
SCAN COUNT = 50
0 to 9990
[1]WIPING
TEMP.difference<ent>
ENTER
[1]WIPING
TEMP.DIFF. = 20°C
0 to 60°C
[1]MEDIA DETECT
DETECT METHOD:SELECT
SELECT / WIDTH
[1]MEDIA DETECT
DETECT :BOTH EDGE
BOHT EDGE / LEFT EDGE
/ RIGHT EDGE / NONE
[1]MAPS
PRINT SPEED : 0%
-50 ~ +50 %
Initialize the setup parameter
of selected user type

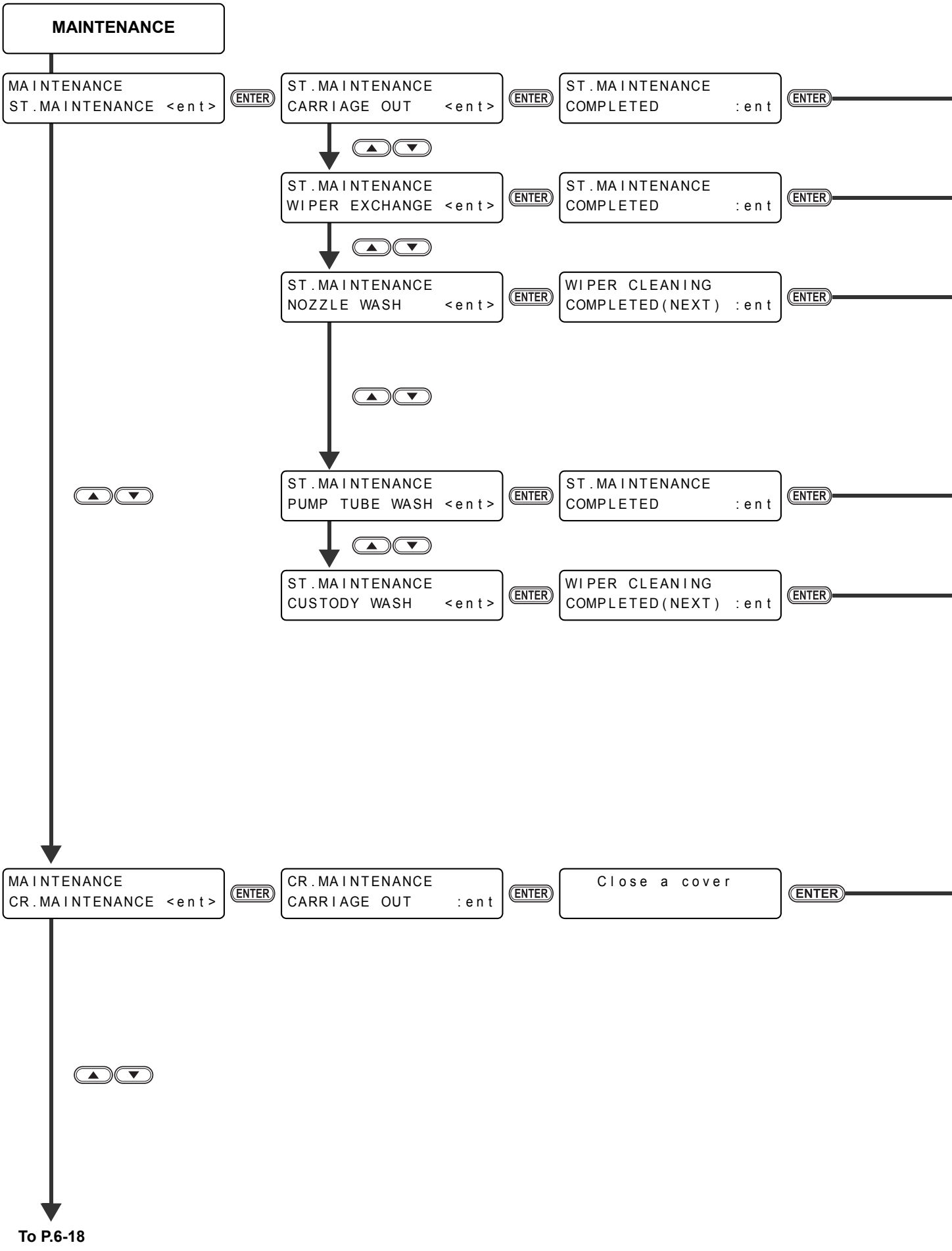
MAINTENANCE
MAINTENANCE
ST.MAINTENANCE <ent>
ENTER
ST.MAINTENANCE
CARRIAGE OUT <ent>
ENTER
ST.MAINTENANCE
COMPLETED :ent
ENTER
ST.MAINTENANCE
WIPER EXCHANGE <ent>
ENTER
ST.MAINTENANCE
COMPLETED :ent
ENTER
ST.MAINTENANCE
NOZZLE WASH <ent>
ENTER
WIPER CLEANING
COMPLETED(NEXT) :ent
ENTER
ST.MAINTENANCE
PUMP TUBE WASH <ent>
ENTER
ST.MAINTENANCE
COMPLETED :ent
ENTER
ST.MAINTENANCE
CUSTODY WASH <ent>
ENTER
WIPER CLEANING
COMPLETED(NEXT) :ent
ENTER
MAINTENANCE
CR.MAINTENANCE <ent>
ENTER
CR.MAINTENANCE
CARRIAGE OUT :ent
ENTER
Close a cover
ENTER

To P.6-18

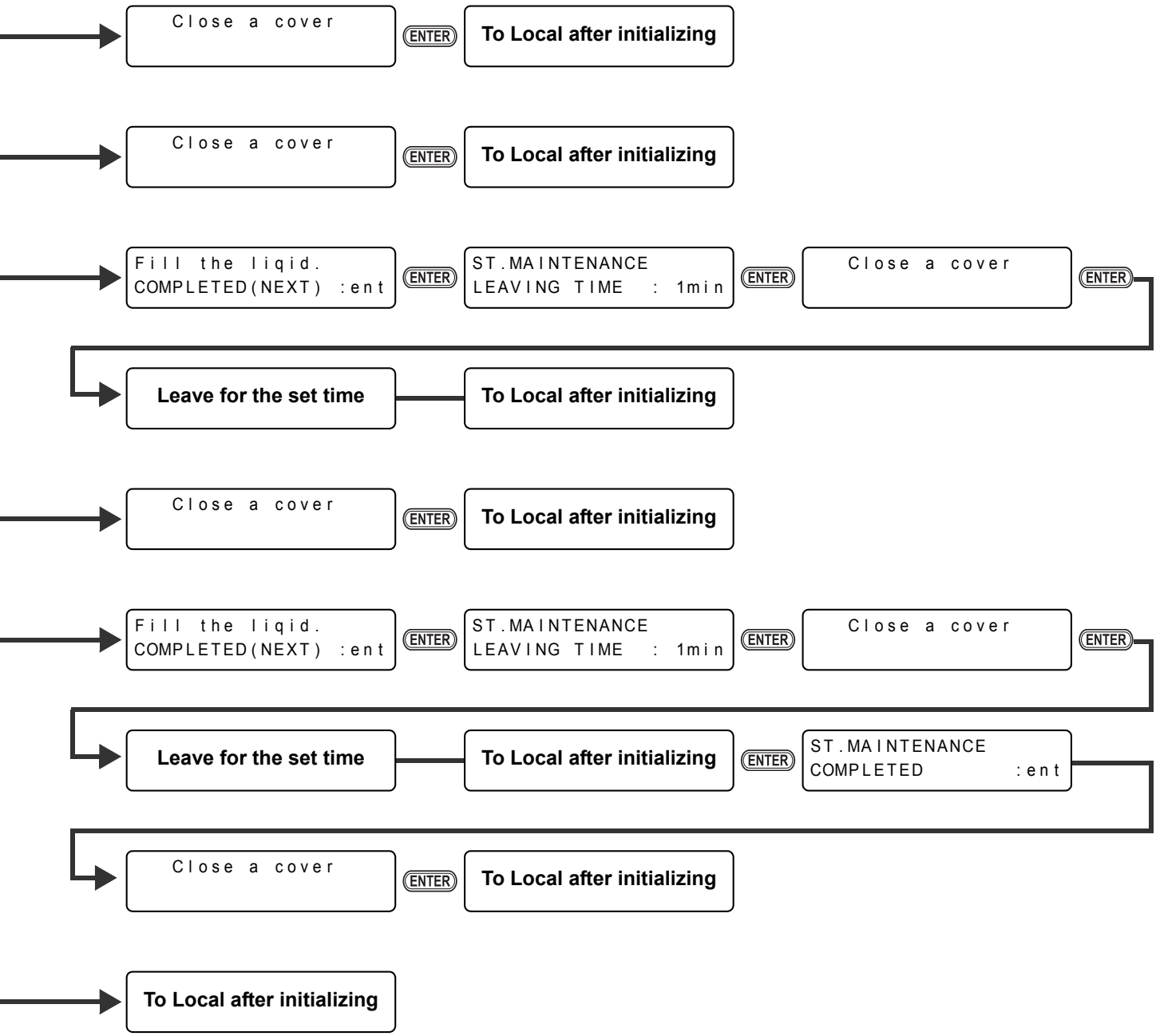
Close a cover
ENTER
To Local after initializing
Close a cover
ENTER
To Local after initializing
Fill the liqid.
COMPLETED(NEXT) :ent
ENTER
ST.MAINTENANCE
LEAVING TIME : 1min
ENTER
Close a cover
ENTER
Leave for the set time
To Local after initializing
Close a cover
ENTER
To Local after initializing
Fill the liqid.
COMPLETED(NEXT) :ent
ENTER
ST.MAINTENANCE
LEAVING TIME : 1min
ENTER
Close a cover
ENTER
Leave for the set time
To Local after initializing
ENTER
ST.MAINTENANCE
COMPLETED :ent
Close a cover
ENTER
To Local after initializing
To Local after initializing

From P.6-16

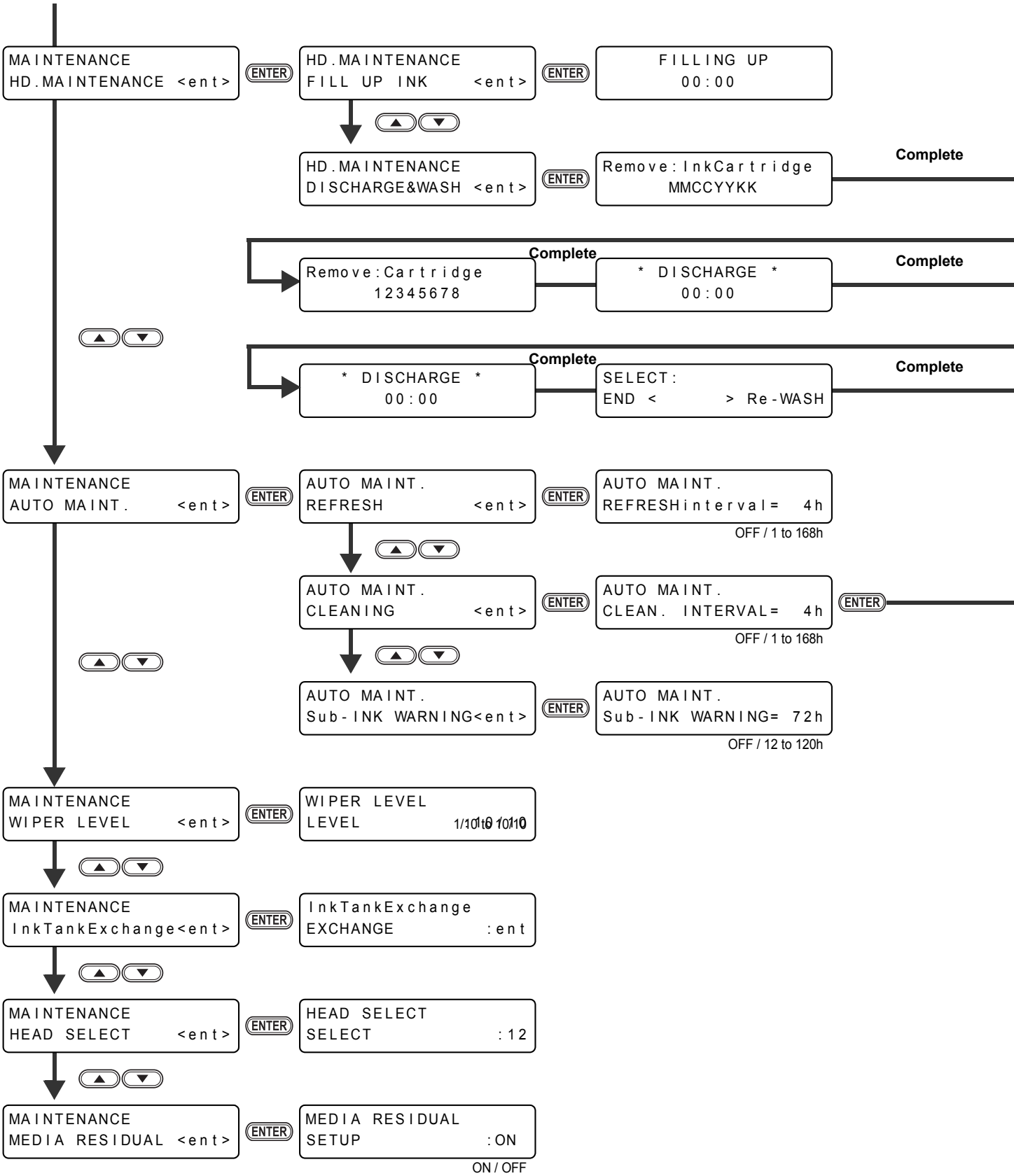
MAINTENANCE
HD.MAINTENANCE <ent>
ENTER
HD.MAINTENANCE
FILL UP INK <ent>
ENTER
FILLING UP
00:00
HD.MAINTENANCE
DISCHARGE&WASH <ent>
ENTER
Remove:InkCartridge
MMCCYYKK
Complete
Remove:Cartridge
12345678
Complete
* DISCHARGE *
00:00
Complete
* DISCHARGE *
00:00
Complete
SELECT:
END < > Re-WASH
Complete
MAINTENANCE
AUTO MAINT. <ent>
ENTER
AUTO MAINT.
REFRESH <ent>
ENTER
AUTO MAINT.
REFRESHinterval= 4h
OFF / 1 to 168h
AUTO MAINT.
CLEANING <ent>
ENTER
AUTO MAINT.
CLEAN. INTERVAL= 4h
ENTER
OFF / 1 to 168h
AUTO MAINT.
Sub-INK WARNING<ent>
ENTER
AUTO MAINT.
Sub-INK WARNING= 72h
OFF / 12 to 120h
MAINTENANCE
WIPER LEVEL <ent>
ENTER
WIPER LEVEL
LEVEL 1/10 to 10/10
MAINTENANCE
InkTankExchange<ent>
ENTER
InkTankExchange
EXCHANGE :ent
MAINTENANCE
HEAD SELECT <ent>
ENTER
HEAD SELECT
SELECT :12
MAINTENANCE
MEDIA RESIDUAL <ent>
ENTER
MEDIA RESIDUAL
SETUP :ON
ON / OFF

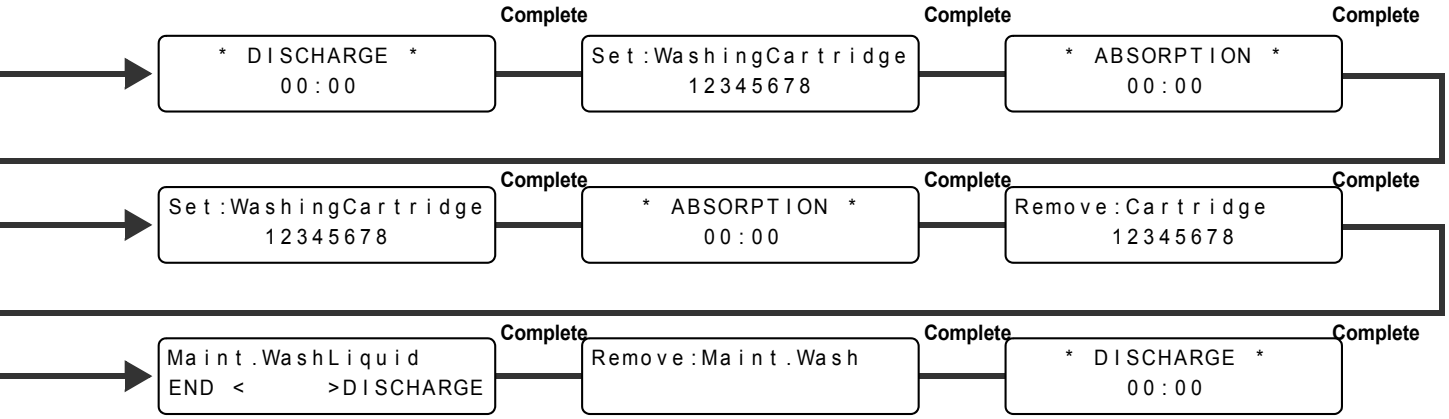

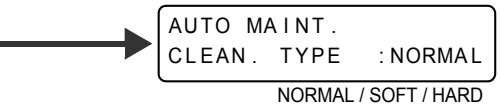

NORMAL / SOFT / HARD

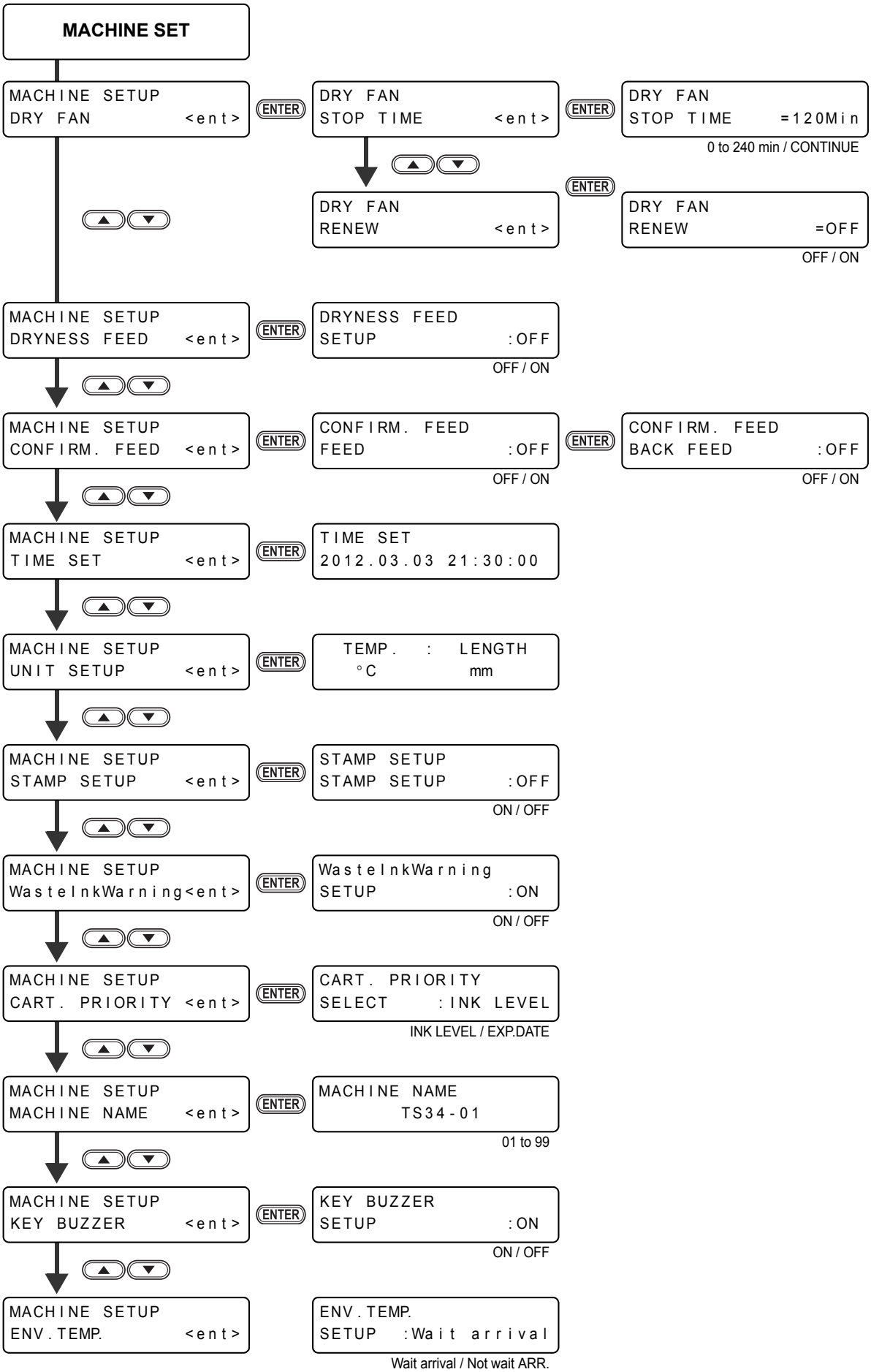
MACHINE SET
MACHINE SETUP
DRY FAN <ent>
ENTER
DRY FAN
STOP TIME <ent>
ENTER
DRY FAN
STOP TIME =120Min
0 to 240 min / CONTINUE
DRY FAN
RENEW <ent>
ENTER
DRY FAN
RENEW =OFF
OFF / ON
MACHINE SETUP
DRYNESS FEED <ent>
ENTER
DRYNESS FEED
SETUP :OFF
OFF / ON
MACHINE SETUP
CONFIRM. FEED <ent>
ENTER
CONFIRM. FEED
FEED :OFF
ENTER
CONFIRM. FEED
BACK FEED :OFF
OFF / ON
OFF / ON
MACHINE SETUP
TIME SET <ent>
ENTER
TIME SET
2012.03.03 21:30:00
MACHINE SETUP
UNIT SETUP <ent>
ENTER
TEMP. : LENGTH
°C mm
MACHINE SETUP
STAMP SETUP <ent>
ENTER
STAMP SETUP
STAMP SETUP :OFF
ON / OFF
MACHINE SETUP
WasteInkWarning<ent>
ENTER
WasteInkWarning
SETUP :ON
ON / OFF
MACHINE SETUP
CART. PRIORITY <ent>
ENTER
CART. PRIORITY
SELECT :INK LEVEL
INK LEVEL / EXP.DATE
MACHINE SETUP
MACHINE NAME <ent>
ENTER
MACHINE NAME
TS34-01
01 to 99
MACHINE SETUP
KEY BUZZER <ent>
ENTER
KEY BUZZER
SETUP :ON
ON / OFF
MACHINE SETUP
ENV.TEMP. <ent>
ENV.TEMP.
SETUP :Wait arrival
Wait arrival / Not wait ARR.

TS34-1800 Operation Manual

August, 2013

MIMAKI ENGINEERING CO.,LTD.
2182-3 Shigeno-otsu, Tomi-shi, Nagano 389-0512 JAPAN

D202262-13-27082013

© MIMAKI ENGINEERING CO., LTD.2013

NH
FW : 2.0